rev:	revision text:	rev.date:	rev.by:	aprv. date:	aprv. by:
02	modified tolerances	2023-07-18	MicNaeb	2023-07-18	RaiSeid
03	general simplification	2023-12-20	KaiGünd	2023-12-20	MicNaeb

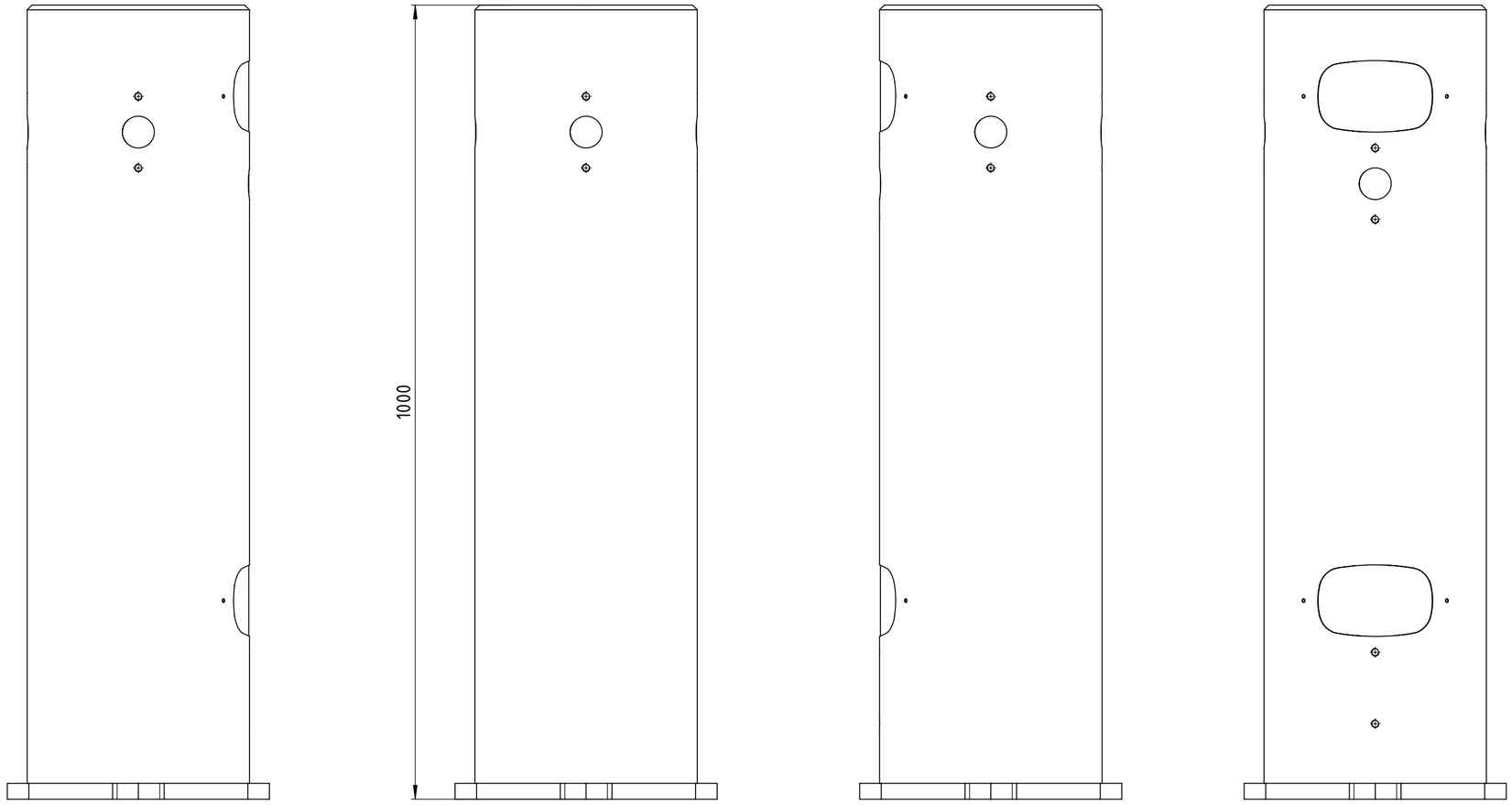

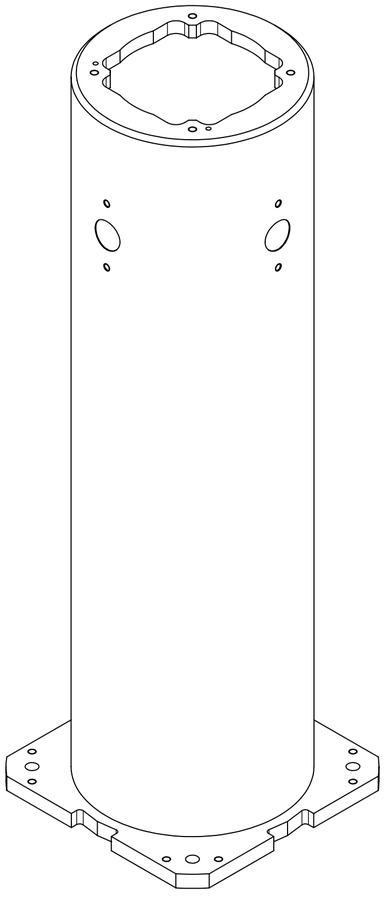

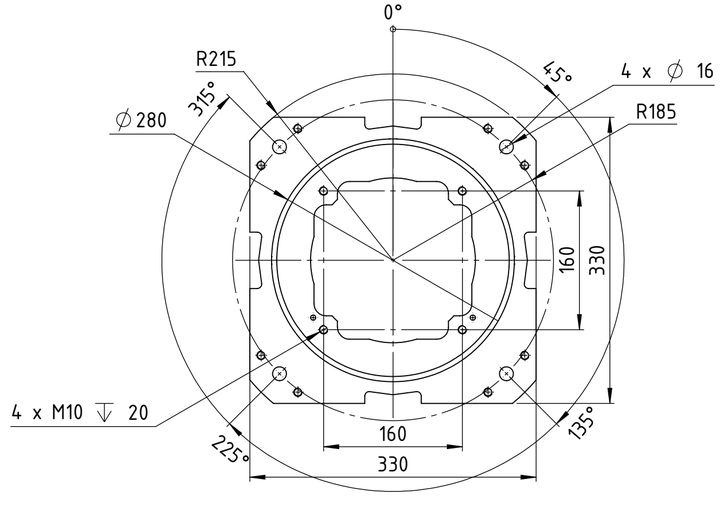

where nothing else is indicated: tolerances: DIN ISO 2768-mH welding: DIN EN ISO 13920-A edges: DIN EN ISO 13715 -0,3 -0,5 +0,3	status: Released		YASKAWA www.yaskawa.eu.com	dimension:	weight: 36,032 kg
	SAP EMEA no:	SAP AH no: 224380		created: 2022-08-08	MicNaeb
	title / description: robot stand C-1000			drawn: 2022-08-08	MicNaeb
				approved: 2022-08-08	SanOber
				drawing-no.: 0000781419-100	revision: 03
					sheet: A2
					1:5 4/5

CONFIDENTIAL! The reproduction, distribution and utilization of this document as well as the communication of its contents to others without express authorization is prohibited. Offenders will be held liable for the payment of damages. All rights reserved in the event of the grant of a patent, utility model or design