Rev.	revision text	rev.date	rev.by	apr. date	apr. by
02	approved outline bottom plate	2022-03-30	McNaab	2022-03-30	AndLoes
03	approved outline bottom plate	2023-02-28	McNaab	2023-02-28	AndLoes
04	modified tolerances	2023-03-16	McNaab	2023-03-16	Rafaled
05	general simplification	2023-12-14	Rafaled	2023-12-15	McNaab
06	center marks changed	2025-01-16	LeeDrive	2025-01-16	McNaab

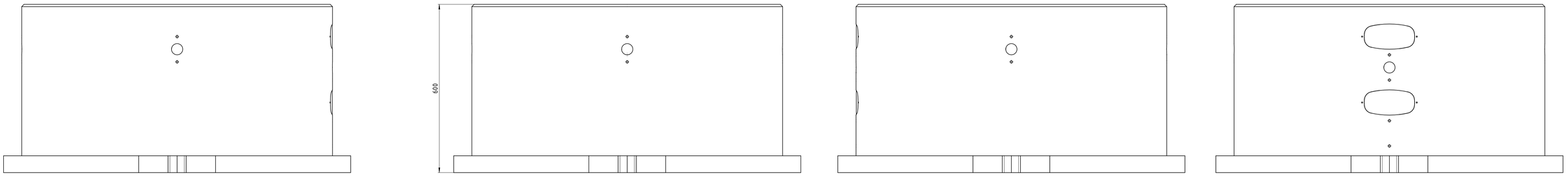

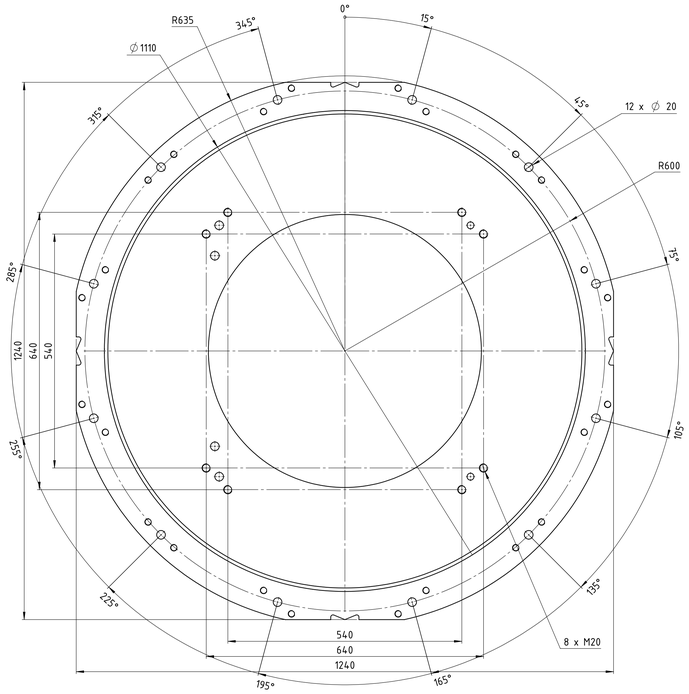

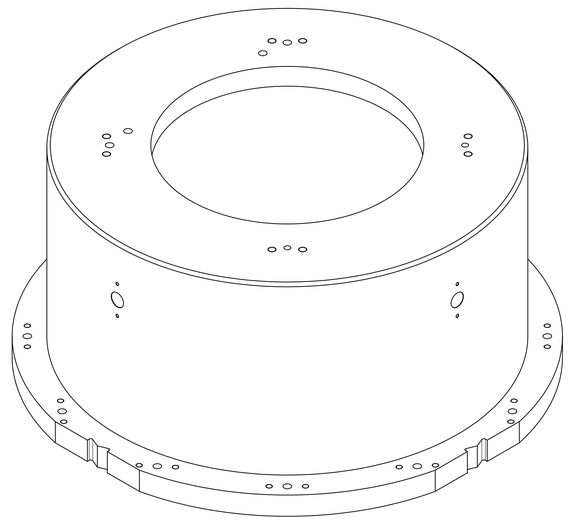

where nothing else is indicated	status: Released		YASKAWA www.yaskawa.eu.com	dimension: 1240x1240x600 mm	weight: 493.673 kg
tolerances: DIN ISO 2768-mH	SAP EMEA no:	SAP AH no: 222177		created: 2022-02-04	McNaab
welding: DIN EN ISO 13920-A				drawn: 2022-02-04	McNaab
edges: DIN EN ISO 13715	title / description: robot stand R-600			approved: 2022-02-07	AndLoes
0.5 / 0.5 / 0.5 / 0.5				drawing-no: 0000130143-100	revision: 06

CONFIDENTIAL! The reproduction, distribution and utilization of this document, as well as the communication of its contents to others without express authorization is prohibited. Offenders will be held liable for the payment of damages. All rights reserved in the event of the grant of a patent, utility model or design.