rev.	revision text	rev.date	rev.by	gpm. date	gpm. by
02	general adaptification	2023-12-14	RaSaid	2023-12-14	McNaab
03	center marks changed	2023-07-19	LeeDrive	2023-07-19	McNaab

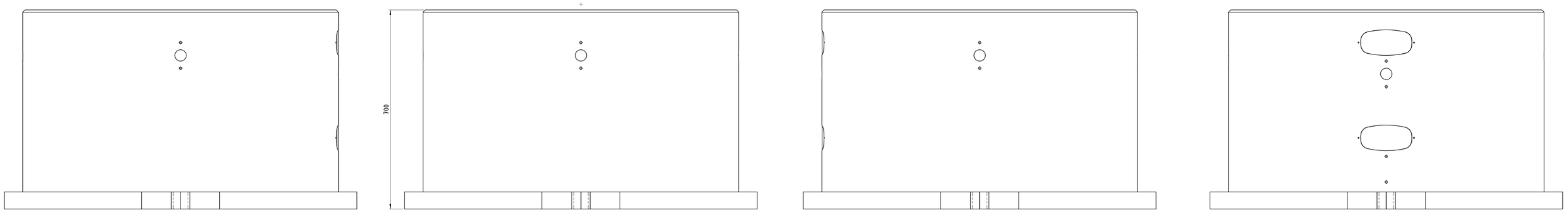

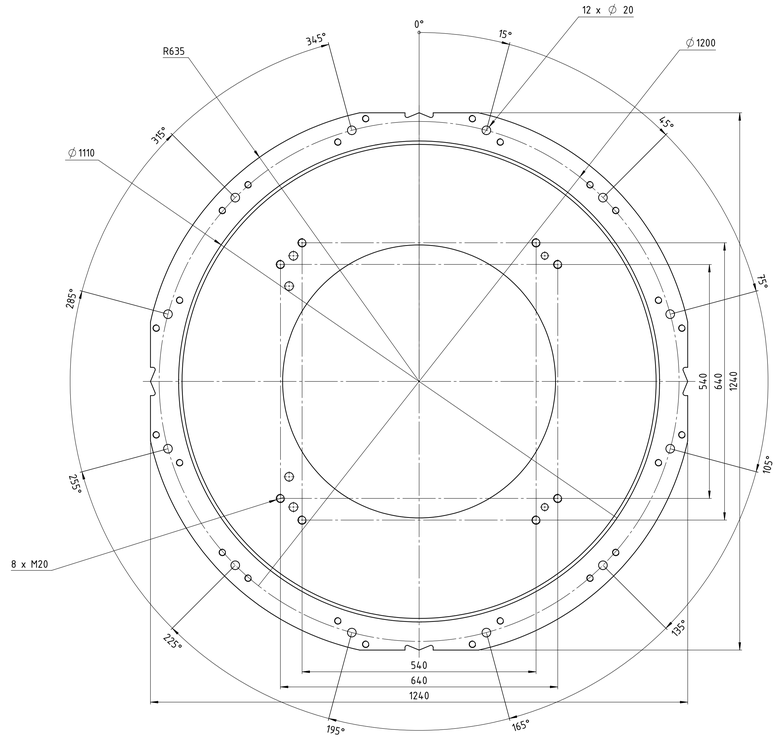

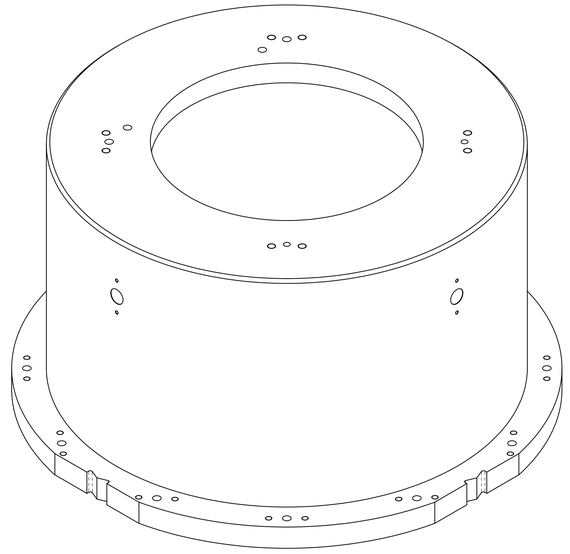

where nothing else is indicated	status: Released		YASKAWA www.yaskawa.eu.com	dimension: 1240x1240x700 mm	weight: 513,9 kg
tolerances: DIN ISO 2768-mH	SAP EMEA no:	SAP AH no: 230786		created: 2023-07-19	McNaab
welding: DIN EN ISO 13920-A				drawn: 2023-07-19	McNaab
edges: DIN EN ISO 13715	title / description: robot stand R-700			approved: 2023-07-19	RaSaid
				drawing-no.: 0001060275-100	revision: 03

CONFIDENTIAL: The reproduction, distribution and utilization of this document as well as the communication of its contents to others without express authorization is prohibited. Offenders will be held liable for the payment of damages. All rights reserved in the event of the grant of a patent, utility model or design.