DWG.NO. HW1386418

RoHS 15

ENCODER CABLE CONNECTION

1	PS1(MASTER)	BLUE
2	BAT0V	BLACK(UL1430:AWG24)
3	PG5V	RED
4	*PS1(MASTER)	GRAY
5	BAT3.6V	RED(UL1430:AWG24)
6	PG0V	BLACK
7	FG	DRAIN WIRE
8	*PS2(SLAVE)	WHITE
9	PS2(SLAVE)	GREEN

SOCKET:DF62WA-9S-2.2C
(HIROSE ELECTRIC)

SOCKET:DF62WA-9S-2.2C(HIROSE ELCTRIC)
SOCKET TERMINAL:DF62W-2226SCFA(GOLD PLATED)
MATES WITH
PLUG:DF62W-9EP-2.2C
PLUG TERMINAL:DF62W-2226PCFA(GOLD PLATED)

MOTOR CABLE CONNECTION

1	PHASE U	RED
2	BRAKE	BLACK
3	PHASE V	WHITE
4	BRAKE	BLACK
5	FREE	-
6	FREE	-
7	PHASE W	BLUE
8	FREE	-
9	FRAME GROUND	GREEN/YELLOW

PLUG:DF62W-9EP-2.2C
(HIROSE ELECTRIC)

PLUG:DF62W-9EP-2.2C(HIROSE ELECTRIC)
PLUG TERMINAL:DF62W-2226PCFA(GOLD PLATED)
MATES WITH
SOCKET:DF62W-9S-2.2C
SOCKET TERMINAL:DF62W-2226SCFA(GOLD PLATED)

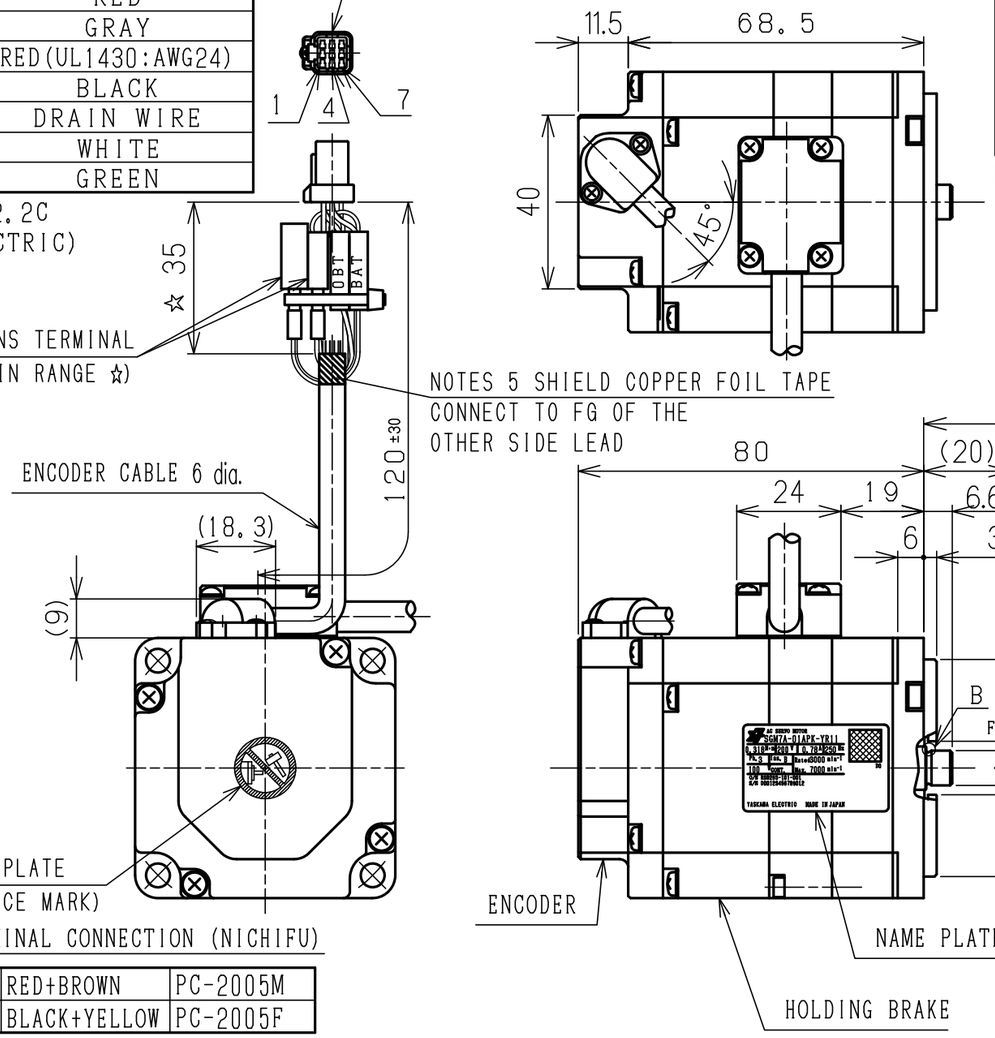

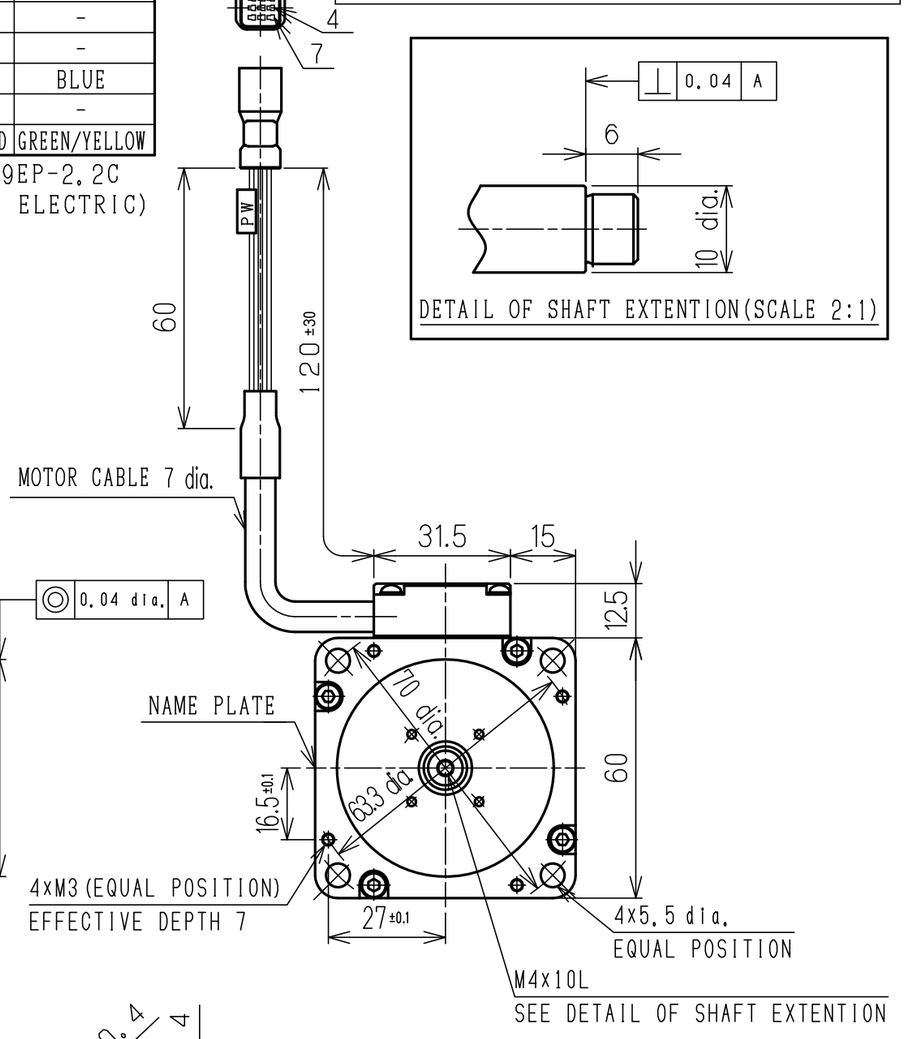

INSERTION PINS TERMINAL CONNECTION (NICHIFU)

BAT	3.6V(BATTERY)	RED+BROWN	PC-2005M
OBT	0V (BATTERY)	BLACK+YELLOW	PC-2005F

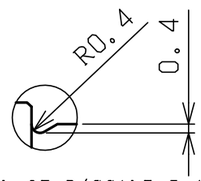

DETAIL OF B(SCALE 5:1)

HOLDING BRAKE SPECIFICATIONS		
STATIC FRICTION TORQUE N·m	VOLTAGE V	CAPACITY W
0.318 OR MORE	DC24	6

NOTES
1. ALL DIMENSIONS ARE IN MILLIMETERS.
2. MOTOR SPECIFICATIONS :900-239-003
3. ENCODER TYPE :UTTAI-B20RT
   THIS ENCODER IS MULTI-DROP SPECIFICATION AND SUPPORTS SAFETY FUNCTION.
4. DEGREES OF PROTECTION:IP42 EXCEPT FOR SHAFT OPENING AND CONNECTORS.
5. GROUND THE SHIELD AT THE END OF ENCODER CABLE TO ENSURE NOISE TOLERANCE.
   PROTECT THE CONNECTOR PART AND SINGLE LEAD WIRE PART WITH SHIELD.

TYPE	RATED OUTPUT W	RATED TORQUE N·m	TIME RATING	RATED SPEED min^{-1}	MAX SPEED min^{-1}	RATED CURRENT Arms	WEIGHT kg	ALLOWABLE RADIAL LOAD Fr N	ALLOWABLE THRUST LOAD Fs N
SGM7A-01APK-YR11	100	0.318	CONT.	3000	7000	0.78	0.8	78	49

Note:
1.All rights reserved.
2.Please note that the data is subject to be deleted without advance notice.
3.No warranty is given in relation to the data including the specification.
4.We are not responsible for any damages or loss caused by the use of the data.

FOR STUDY PURPOSE ONLY

SCALE 1 :√2

YASKAWA 株式会社 安川電機

Reference Drawing

TITLE FOR MOTOMAN DIMENSIONS OF AC SERVOMOTOR

DRWN DATE Apr.25' 19

DWG.NO. HW1386418

SIZE A3