YASKAWA

YASKAWA AC Drive-V1000 Option

MECHATROLINK-III

Technical Manual

Type: SI-ET3/V

To properly use the product, read this manual thoroughly and retain for easy reference, inspection, and maintenance. Ensure the end user receives this manual.

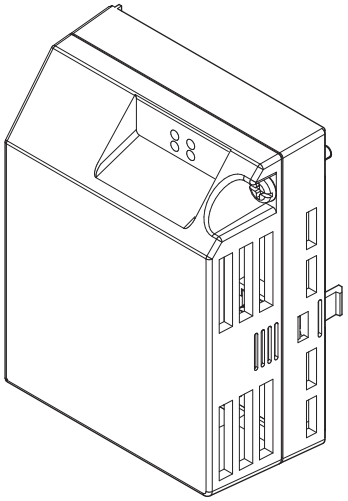

MANUAL NO. SIEP C730600 63B

Table of Contents

1 Preface and Safety

Yaskawa manufactures products used as components in a wide variety of industrial systems and equipment. The selection and application of Yaskawa products remain the responsibility of the equipment manufacturer or end user. Yaskawa accepts no responsibility for the way its products are incorporated into the final system design. Under no circumstances should any Yaskawa product be incorporated into any product or design as the exclusive or sole safety control. Without exception, all controls should be designed to detect faults dynamically and fail safely under all circumstances. All systems or equipment designed to incorporate a product manufactured by Yaskawa must be supplied to the end user with appropriate warnings and instructions as to the safe use and operation of that part. Any warnings provided by Yaskawa must be promptly provided to the end user. Yaskawa offers an express warranty only as to the quality of its products in conforming to standards and specifications published in the Yaskawa manual. NO OTHER WARRANTY, EXPRESS OR IMPLIED, IS OFFERED. Yaskawa assumes no liability for any personal injury, property damage, losses, or claims arising from misapplication of its products.

◆ Applicable Documentation

The following manuals are available for the SI-ET3/V option:

Option Unit

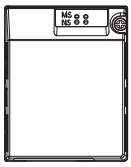	**YASKAWA AC Drive -V1000 Option SI-ET3/V MECHATROLINK-III Installation Manual Manual No: TOBP C730600 63**	Read this manual first. The installation manual is packaged with the option and contains a basic overview of wiring, settings, functions, and fault diagnoses.
	YASKAWA AC Drive -V1000 Option SI-ET3/V MECHATROLINK-III Technical Manual Manual No: SIEP C730600 63 (This book)	The technical manual contains detailed information. Access the following sites to obtain the technical manual: U.S.: http://www.yaskawa.com Europe: http://www.yaskawa.eu.com Japan: http://www.e-mechatronics.com Other areas: contact a Yaskawa representative.

Drive

	**YASKAWA AC Drive-V1000 Quick Start Guide**	Access the following sites to obtain instruction manuals for Yaskawa products: U.S.: http://www.yaskawa.com Europe: http://www.yaskawa.eu.com Japan: http://www.e-mechatronics.com Other areas: contact a Yaskawa representative. For questions, contact the local Yaskawa sales office or the nearest Yaskawa representative.
	YASKAWA AC Drive-V1000 Technical Manual	

◆ Terms

Note:	Indicates supplemental information that is not related to safety messages.
Drive:	YASKAWA AC Drive V1000
MECHATROLINK-III option:	YASKAWA AC Drive -V1000 Option SI-ET3/V MECHATROLINK-III

◆ Registered Trademarks

- MECHATROLINK-III is a trademark of the MECHATROLINK Members Association (MMA).
- All trademarks are the property of their respective owners.

◆ Supplemental Safety Information

Read and understand this manual before installing, operating, or servicing this option. The option must be installed according to this manual and local codes.

The following conventions are used to indicate safety messages in this manual. Failure to heed these messages could result in serious or possibly even fatal injury or damage to the products or to related equipment and systems.

⚠ DANGER
Indicates a hazardous situation, which, if not avoided, will result in death or serious injury.

⚠ WARNING
Indicates a hazardous situation, which, if not avoided, could result in death or serious injury.

⚠ CAUTION
Indicates a hazardous situation, which, if not avoided, could result in minor or moderate injury.

NOTICE
Indicates an equipment damage message.

■ General Safety

General Precautions
• The diagrams in this section may include options and drives without covers or safety shields to illustrate details. Be sure to reinstall covers or shields before operating any devices. The option should be used according to the instructions described in this manual. • Any illustrations, photographs, or examples used in this manual are provided as examples only and may not apply to all products to which this manual is applicable. • The products and specifications described in this manual or the content and presentation of the manual may be changed without notice to improve the product and/or the manual. • When ordering new copies of the manual, contact a Yaskawa representative or the nearest Yaskawa sales office and provide the manual number shown on the front cover.

⚠ DANGER
Heed the safety messages in this manual. Failure to comply will result in death or serious injury. The operator is responsible for injuries or equipment damage caused from failure to heed the warnings in the manual.

NOTICE
Do not modify the drive or option circuitry. Failure to comply could result in damage to the drive or option and will void warranty. Yaskawa is not responsible for any modification of the product made by the user. This product must not be modified. **Do not expose the drive or the option to halogen group disinfectants.** Failure to comply may cause damage to the electrical components in the option. Do not pack the drive in wooden materials that have been fumigated or sterilized. Do not sterilize the entire package after the product is packed.

■ Option Unit Warning Labels

Warning information is displayed on the option unit as shown in the figure below. Follow all warnings and safety instructions when using the product.

When using the drive in an area that may require displaying warning information in Japanese or Chinese, a warning label is provided with the option. This label can be placed over the English and French warnings on the front of the option.

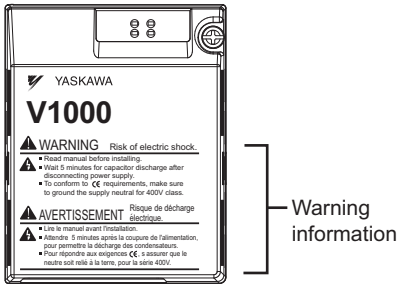

■ Warning Contents

WARNING Risk of electric shock.

- Read manual before installing.
- Wait 5 minutes for capacitor discharge after disconnecting power supply.
- To conform to CE requirements, make sure to ground the supply neutral for 400V class.

AVERTISSEMENT Risque de décharge électrique.

- Lire le manuel avant l'installation.
- Attendre 5 minutes après la coupure de l'alimentation, pour permettre la décharge des condensateurs.
- Pour répondre aux exigences CE, s assurer que le neutre soit relié à la terre, pour la série 400V.

2 Product Overview

◆ About This Product

The MECHATROLINK-III option provides a communications connection between the drive and a MECHATROLINK-III network. The option connects the drive to a MECHATROLINK-III network and facilitates the exchange of data.

This manual explains the handling, installation and specifications of this product.

MECHATROLINK-III is a communications link to connect industrial devices (such as smart motor controllers, operator interfaces, and variable frequency drives) as well as control devices (such as programmable controllers and computers) to a network. MECHATROLINK-III is a simple, networking solution that reduces the cost and time to wire and install factory automation devices, while providing interchangeability of like components from multiple vendors.

By installing the MECHATROLINK-III option to a drive, it is possible to do the following from a MECHATROLINK-III master device:

- operate the drive
- monitor the operation status of the drive
- change parameter settings

◆ Applicable Models

The option can be used with the drive models in *Table 1*.

Table 1 Applicable Models

Drive Series	Drive Model Number	Software Version <1>
V1000	CIMR-V□□A□□□□□	≥1023

<1> See “PRG” on the drive nameplate for the software version number.

3 Receiving

Please perform the following tasks upon receipt of the option:

- Inspect the option for damage. Contact the shipper immediately if the option appears damaged upon receipt.
- Verify receipt of the correct model by checking the model number printed on the name plate of the option package.
- Contact your supplier if you have received the wrong model or the option does not function properly.

◆ Contents and Packaging

Table 2 Option Package Contents

Description:	Option Unit	Ground Wire	Warning Labels	Installation Manual
–	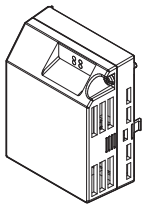	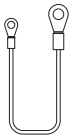	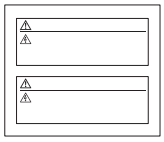	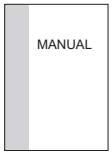
Quantity:	1	4	1	1

◆ Tools Required for Installation

A Phillips screwdriver (M3, M3.5 to M6 metric or #1, #2 U.S. standard <1>) is required to install the option.

<1> Screw sizes vary by drive capacity. Select a screwdriver that matches the drive capacity.

4 Option Components

◆ SI-ET3/V Option

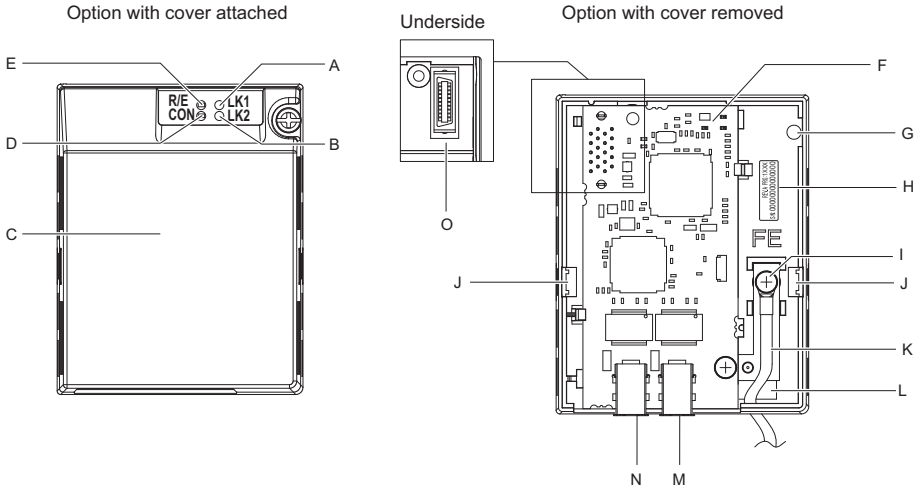

A – LED (LK1) *<1>*
B – LED (LK2) *<1>*
C – Option cover
D – LED (CON) *<1>*
E – LED (R/E) *<1>*
F – PCB
G – Screw hole (attaching option cover)
H – Nameplate
I – Functional earth cable connection (FE)
J – Mounting tabs
K – Ground wire *<2>*
L – Pass-through hole for wire
M – Communication connector CN2
N – Communication connector CN1
O – Option connector

<1> Refer to *Option LED Display on page 10* for details on the LEDs.
<2> The ground wire provided in the option shipping package must be connected during installation.

Figure 1 Option Unit

◆ Dimensions

The installed option adds 27 mm (1.06 in.) to the total depth of the drive.

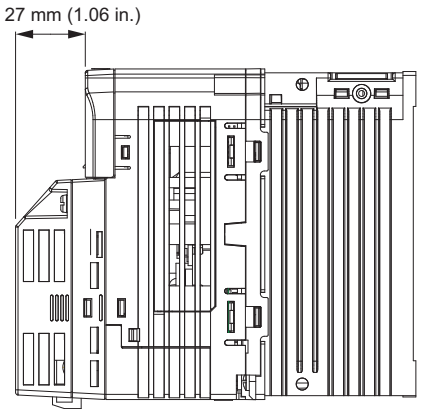

Figure 2 Dimensions

◆ Connector

Table 3 Connector Descriptions

Connector	Pin No.	Signal Name	I/O	Function
CN1/CN2	1	TXD_P	I/O	Send data (+): OUT
	2	TXD_N	I/O	Send data (-): OUT
	3	RXD_P	I/O	Receive data (+): IN
	4	(NC)	–	–
	5	(NC)	–	–
	6	RXD_N	I/O	Receive data (-): N
	7	(NC)	–	–
	8	(NC)	–	–
	Shell	SLD	–	Shield

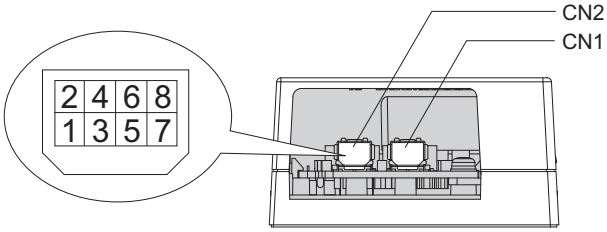

Figure 3 MECHATROLINK-III Option Connector

◆ Option LED Display

The MECHATROLINK-III Option has four LEDs that indicate the option card or communication status.

■ Checking LED Operation

Table 4 Option LED States

Name	Display	Operating Status	Remarks
R/E	Lit in green	Power supply on	• SI-ET3/V has been successfully powered up • An internal, self-diagnostic check completed in the SI-ET3/V
	Lit in red	Error	• Error/alarm occured • Command error occurred (parameter error, phase error, combination error)
	Flashing in red	SI-ET3 error	Error found during SI-ET3/V's self-diagnostic check
	Unlit	Power supply off	• The drive has no power • SI-ET3/V is not properly connected to the drive, or SI-ET3/V has no power • An internal, self-diagnostic error occurred in the SI-ET3/V
CON	Lit in green	Connection established	Established connection
	Unlit	Connection unestablished	Connection with master device is not established
LK1	Lit in green	Connector CN1 connected	Connector CN1 is connected to other stations
	Unlit	Connector CN1 disconnected	Connector CN1 is not connected to other stations (cable not connected, cable disconnected, other stations not powered up)
LK2	Lit in green	Connector CN2 connected	Connector CN2 is connected to other stations
	Unlit	Connector CN2 disconnected	Connector CN2 is not connected to other stations (cable not connected, cable disconnected, other stations not powered up)

5 Installation Procedure

◆ Section Safety

⚠ DANGER

Electrical Shock Hazard

Do not connect or disconnect wiring while the power is on.

Failure to comply will result in death or serious injury.

Disconnect all power to the drive, wait at least five minutes after all indicators are off, measure the DC bus voltage to confirm safe level, and check for unsafe voltages before servicing to prevent electric shock. The internal capacitor remains charged even after the power supply is turned off. The charge indicator LED will extinguish when the DC bus voltage is below 50 Vdc.

⚠ WARNING

Electrical Shock Hazard

Do not remove option board cover while the power is on.

Failure to comply could result in death or serious injury.

The diagrams in this section may include option units and drives without covers or safety shields to show details. Be sure to reinstall covers or shields before operating any devices. The option should be used according to the instructions described in this manual.

Do not allow unqualified personnel to use equipment.

Failure to comply could result in death or serious injury.

Maintenance, inspection, and replacement of parts must be performed only by authorized personnel familiar with installation, adjustment, and maintenance of this product.

Do not use damaged wires, place excessive stress on wiring, or damage the wire insulation.

Failure to comply could result in death or serious injury.

Fire Hazard

Tighten all terminal screws to the specified tightening torque.

Loose electrical connections could result in death or serious injury by fire due to overheating of electrical connections.

NOTICE

Damage to Equipment

Observe proper electrostatic discharge (ESD) procedures when handling the option, drive, and circuit boards.

Failure to comply may result in ESD damage to circuitry.

Never shut the power off while the drive is outputting voltage.

Failure to comply may cause the application to operate incorrectly or damage the drive.

Do not operate damaged equipment.

Failure to comply may cause further damage to the equipment.

Do not connect or operate any equipment with visible damage or missing parts.

Do not use unshielded cable for control wiring.

Failure to comply may cause electrical interference resulting in poor system performance.

Use shielded twisted-pair wires and ground the shield to the ground terminal of the drive.

NOTICE

Properly connect all pins and connectors.

Failure to comply may prevent proper operation and possibly damage equipment.

Check wiring to ensure that all connections are correct after installing the option and connecting any other devices.

Failure to comply may result in damage to the option.

◆ Prior to Installing the Option

Prior to installing the option, wire the drive, make necessary connections to the drive terminals, and verify that the drive functions normally without the option installed. Refer to the instruction manmual packaged with the drive for information on wiring and connecting the drive.

◆ Installing the Option

Refer to the instructions below to install the option.

DANGER! *Electrical Shock Hazard. Do not connect or disconnect wiring while the power is on. Failure to comply could result in death or serious injury. Before installing the option, disconnect all power to the drive. The internal capacitor remains charged even after the power supply is turned off. The charge indicator LED will extinguish when the DC bus voltage is below 50 Vdc. To prevent electric shock, wait at least five minutes after all indicators are off and measure the DC bus voltage level to confirm safe level.*

1. Shut off power to the drive, wait at least five minutes after confirming the DC bus voltage is safe, then loosen the screw that fastens the front cover in place and remove the front cover. This drive front cover will be replaced by the option cover. Cover removal varies depending on drive size.

NOTICE: *Damage to Equipment. Observe proper electrostatic discharge procedures (ESD) when handling the option, drive, and circuit boards. Failure to comply may result in ESD damage to circuitry.*

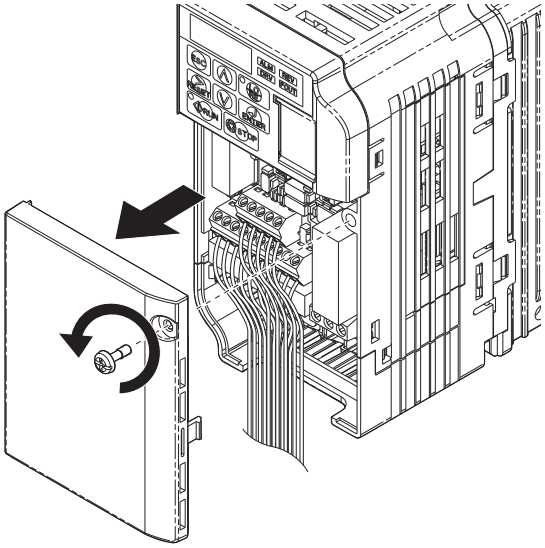

Figure 4 Remove Front Cover

2. The remaining installation steps differ based on drive model. Find the drive model number on the drive nameplate and refer to the step indicated in *Table 5* based on your model number.

Table 5 Installation Steps Based on Drive Model

Enclosure Type	Drive Model	Proceed to Step	Page
IP20/Open-Chassis	CIMR-V□□A□□□□B	*3.*	*13*
IP20/NEMA Type 1 <1>	CIMR-V□□A□□□□F	*6.*	*14*

<1> Installing the option on an IP20/NEMA Type 1 enclosure drive voids NEMA Type 1 protection while maintaining IP20 conformity.

3. For IP20/Open-Chassis models CIMR-V□□A□□□□B, remove the bottom cover of the drive by applying pressure to the tabs on each side of the bottom cover. Pull the bottom cover away from the drive while pushing in on the tabs to release the cover from the drive. Refer to *Figure 5* for details.
Refer to *Figure 6* for drive models CIMR-V□BA0006B to BA0018B, 2A0008B to 2A0069B, and 4A0001B to 4A0038B, which require removing the terminal cover prior to removing the bottom cover.

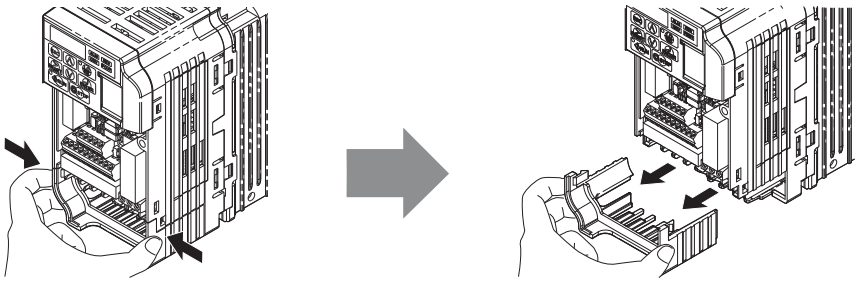

Figure 5 Remove the Bottom Cover on an IP20/Open-Chassis Drive (Models CIMR-V□BA0001B to BA0003B and 2A0001B to 2A0006B)

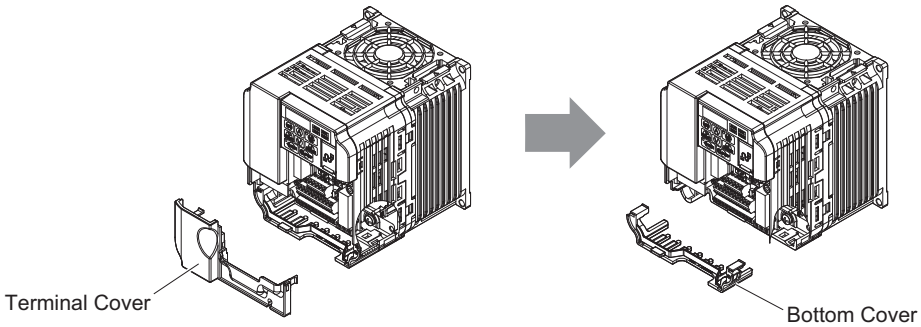

Figure 6 Remove the Terminal Cover and Bottom Cover on an IP20/Open-Chassis Drive (Models CIMR-V□BA0006B to BA0018B; 2A0008B to 2A0069B; 4A0001B to 4A0038B)

4. On IP20/Open-Chassis models, connect the drive side of the ground wire to the drive ground terminal.

Note: The four different ground wires packaged with the option connect the option to different drive models. Select the proper ground wire depending on drive size. Refer to *Table 6* for ground wire selection by drive model.

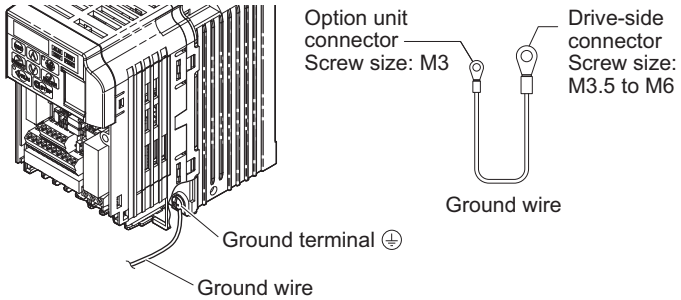

Figure 7 Connect the Ground Wire on an IP20/Open-Chassis Drive

Table 6 Ground Wire Selection

Ground Wire Length (mm/in)	Drive Model CIMR-V□		
	Single-Phase 200 V Class	Three-Phase 200 V Class	Three-Phase 400 V Class
150/5.9	BA0001 BA0002 BA0003	2A0001 2A0002 2A0004 2A0006	–
200/7.9	BA0006 BA0010 BA0012 BA0018	2A0010 2A0012 2A0020	4A0001 4A0002 4A0004 4A0005 4A0007 4A0009 4A0011
250/9.8	–	2A0030 2A0040	4A0018 4A0023
400/15.7	–	2A0056 2A0069	4A0031 4A0038

5. For IP20/Open-Chassis models, go to Step *9.* on page *15*.
6. For IP20/NEMA Type 1 enclosure models CIMR-V□□A□□□□F, loosen the screw on the front of the NEMA Type 1 terminal cover and remove it from the drive. Refer to *Figure 8* for details.
   Refer to *Figure 9* for drive models CIMR-V□BA0006F to BA0018F, 2A0010F to 2A0069F, and 4A0001F to 4A0038F, which require removing the plastic terminal cover prior to removing the NEMA Type 1 terminal cover.

Note: Installing the option on an IP20/NEMA Type 1 enclosure drive voids NEMA Type 1 protection while maintaining IP20 conformity.

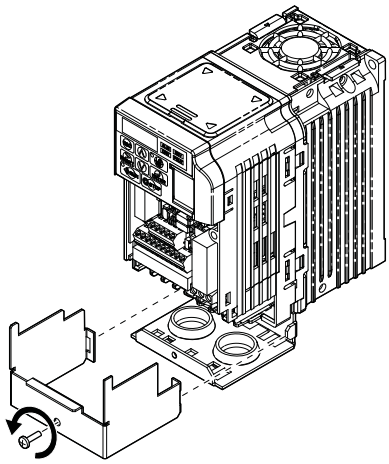

Figure 8 Remove the NEMA Type 1 Terminal Cover (CIMR-V□BA0001F to BA0003F, 2A0001F to 2A0006F)

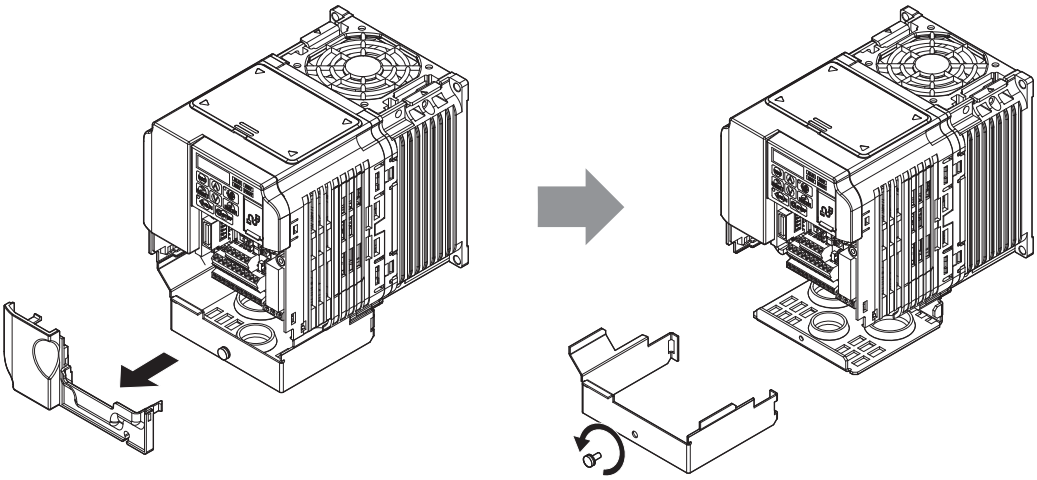

Figure 9 Remove the Terminal Cover on an IP20/NEMA Type 1 Drive (Models CIMR-V□BA0006F to BA0018F; 2A0008F to 2A0069F; 4A0001F to 4A0038F)

7. For models CIMR-V□BA0001F to BA0003F, 2A0001F to 2A0006F, loosen the screws attaching the NEMA Type 1 conduit bracket to the drive to remove the NEMA Type 1 conduit bracket.

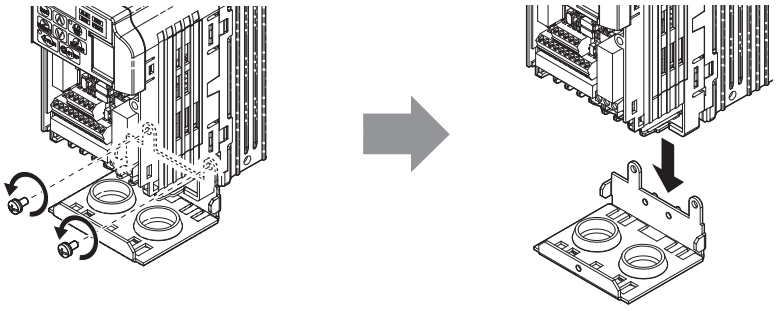

Figure 10 Remove the NEMA Type 1 Conduit Bracket

8. On NEMA Type 1 enclosure models (CIMR-V□BA0001F to BA0003F, 2A0001F to 2A0006F), the screw for the drive ground terminal also acts as one of the screws that attaches the NEMA Type 1 conduit bracket to the drive. Reattach the NEMA Type 1 conduit bracket according to ***Figure 11*** and connect the drive-side of the ground wire to the drive ground terminal.

Note: The four different ground wires packaged with the option connect the option to different drive models. Select the proper ground wire depending on drive size. Refer to ***Table 6*** on page ***14*** for ground wire selection by drive model.

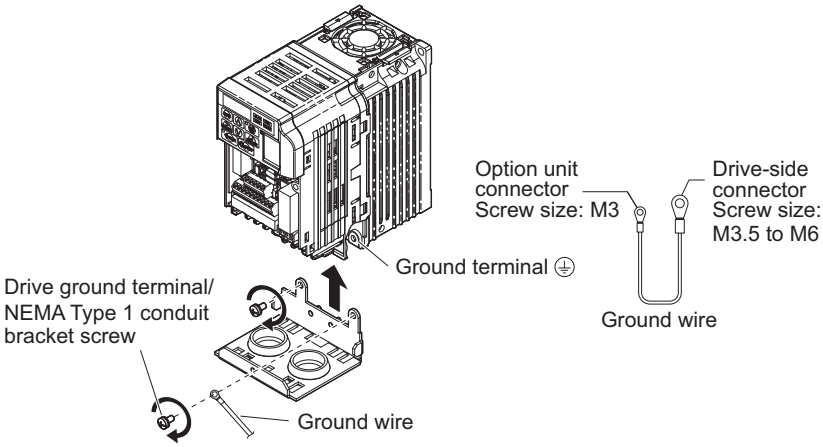

Figure 11 Reattach the NEMA Type 1 Conduit Bracket and Connect the Ground Wire for models CIMR-V□BA0001F to BA0003F, 2A0001F to 2A0006F

9. Reattach the bottom cover. Keep the ground wire inside of the bottom cover when reattaching.

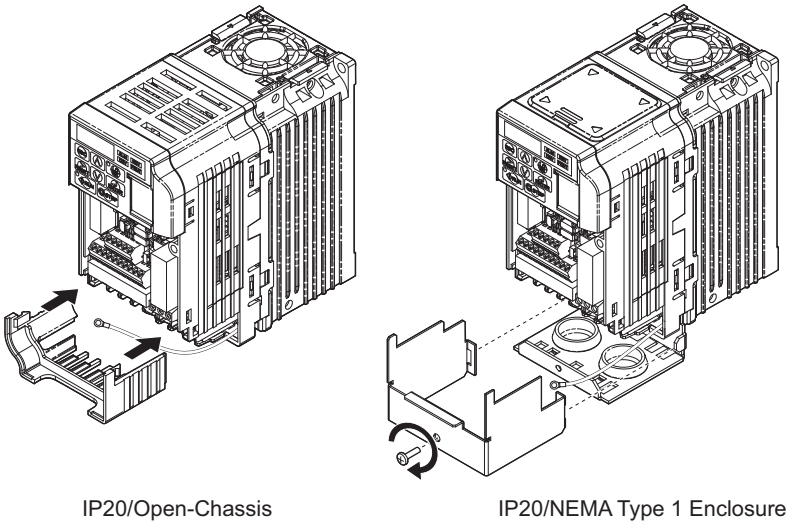

Figure 12 Reattach the Bottom Cover

10. On models CIMR-V□BA0006□ to BA0018□, 2A0008□ to 2A0069□, and 4A0001□ to 4A0038□, reattach the terminal cover.
Refer to ***Figure 13*** and ***Figure 14*** for drive models CIMR-V□BA0006□ to BA0018□, 2A0008□ to 2A0020□, and 4A0001□ to 4A0011□, which require routing the ground wire through the provided notch when reinstalling the terminal cover.

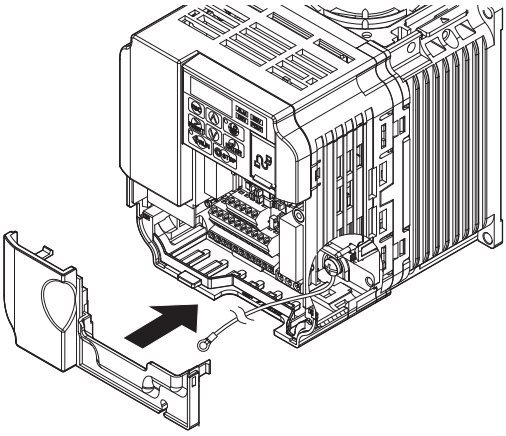

Figure 13 Reattach the Terminal Cover
(Models CIMR-V□BA0006□ to BA0018□; 2A0008□ to 2A0069□; 4A0001□ to 4A0038□)

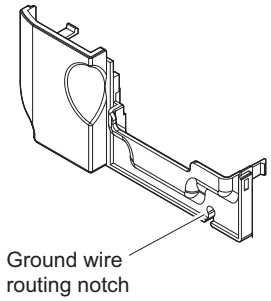

Figure 14 Terminal Cover Ground Wire Notch
(Models CIMR-V□BA0006□ to BA0018□; 2A0008□ to 2A0020□; 4A0001□ to 4A0011□)

11. Remove the option cover and pass the ground wire through the inside of the drive bottom cover and into the through-hole for the ground wire at the front of the option.

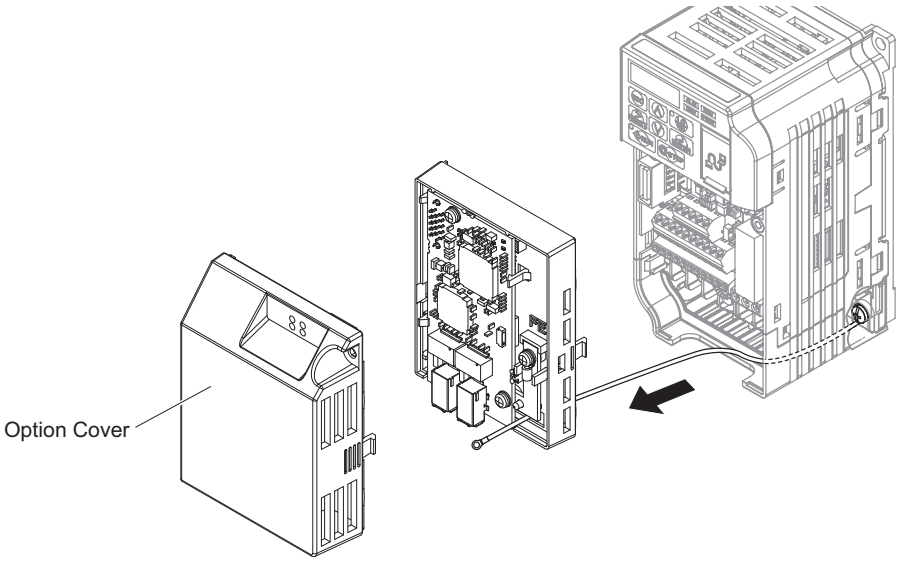

Figure 15 Ground Wire Routing

12. Attach the option to the drive. Properly seat the tabs on the left and right sides of the option to the drive case.

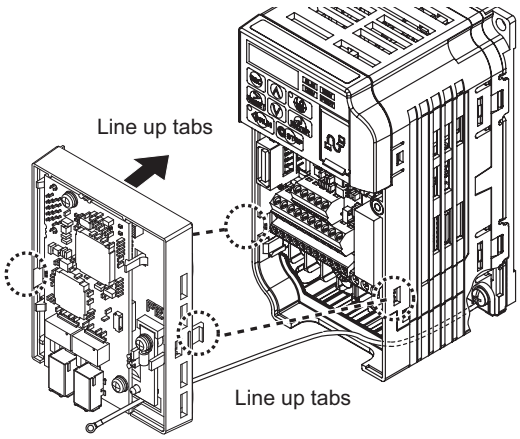

Figure 16 Connect the Option

13. Connect the ground wire at the option ground terminal. Tighten the screw to 0.5 to 0.6 N·m or (4.4 to 5.3 in lbs) using an M3 Phillips screwdriver.

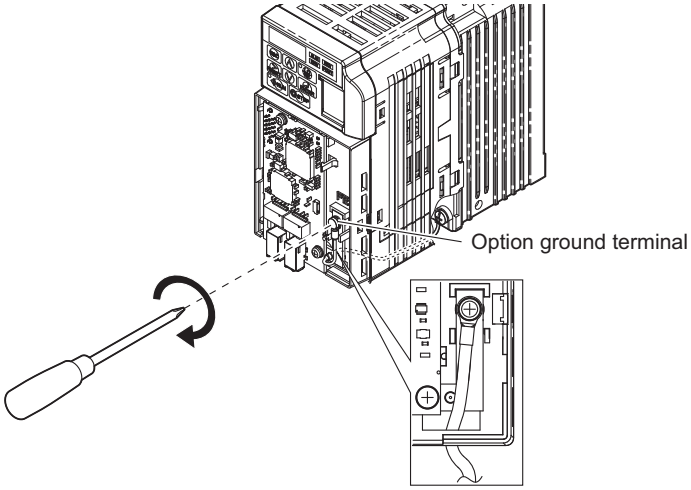

Figure 17 Connect the Ground Wire to the Option

14. Connect the MECHATROLINK-III communication cable to option communication connector CN1 or CN2. Refer to ***Communication Cable Wiring on page 18*** for details.

Note: Do not connect or disconnect the communication cable while the drive is powered up or while the drive is in operation. Failure to comply may cause a static discharge, which will cause the option card to stop working properly. Cycle power on the drive and option card to reestablish functionality.

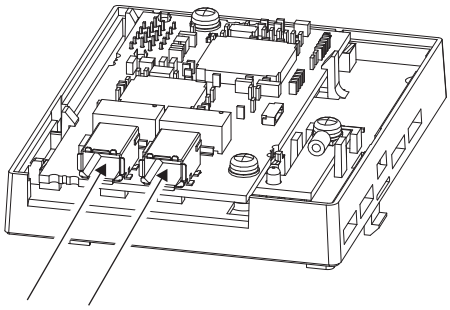

Figure 18 Communication Cable Ports

MECHATROLINK-III Communication Cable Specification

Wire the MECHATROLINK-III communications cables to the communications connector (CN1 or CN2). Install MECHATROLINK-III communications cables apart from main-circuit wiring and other electrical and power lines.

Note: Maximum transmission distance is 100 m (3937.0 in.). Minimum wiring distance between stations is 0.2 m (7.9 in.)

Connection Diagram

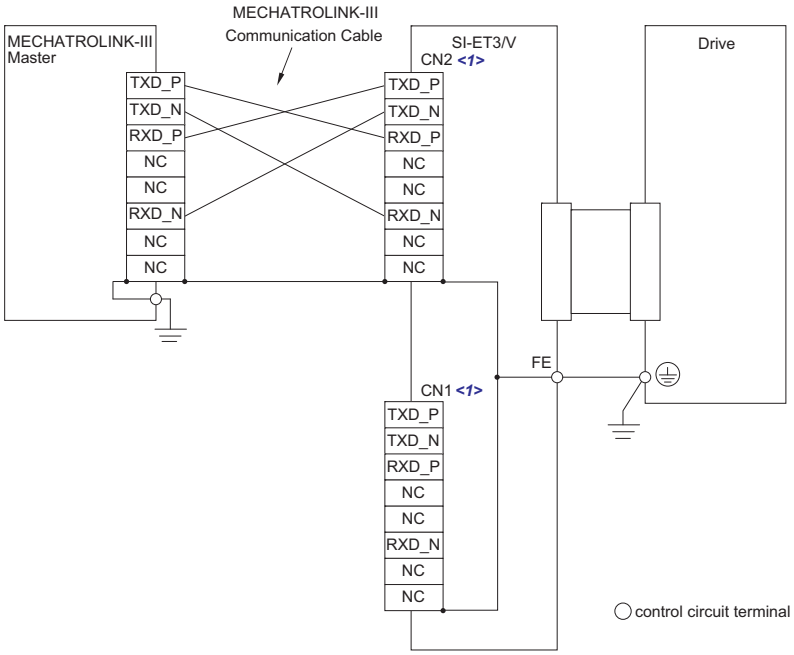

<1> Use connector CN1 or CN2 to connect with the MECHATROLINK-III master. Refer to *Communication Cable Wiring on page 18* for details.

Figure 19 Wiring Diagram

Communication Cable Wiring

The dual communication cable ports on the option board act as a switch to allow for flexibility in cabling topology. For example, a traditional star network topology may be employed by using a single port on the option board. Alternatively, a daisychained approach may be employed by using both communication cable ports. This second approach reduces the requirements of MECHATROLINK-III hub module ports.

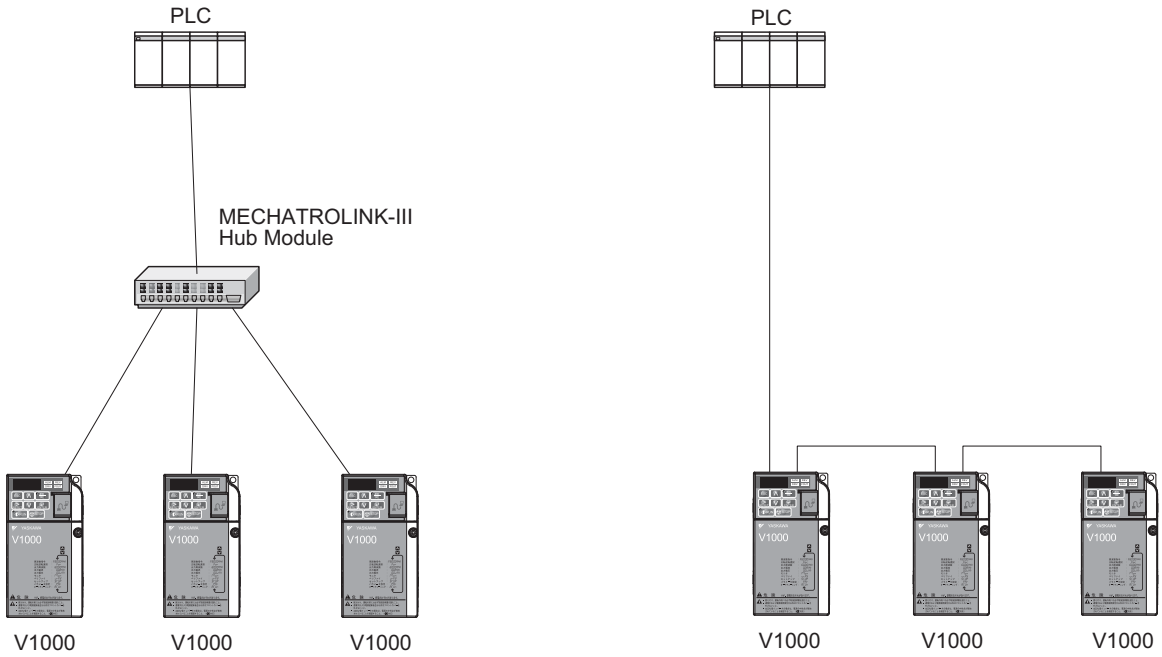

Figure 20 Topology Options

Table 7 MECHATROLINK-III Communication Cable

Specification	Cable Specification	Length (L)	Model
MECHATROLINK-III connection without ferrite core	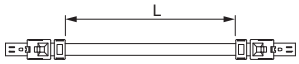	0.2 m (7.9 in.)	JEPMC-W6012-A2-E
		0.5 m (19.7 in.)	JEPMC-W6012-A5-E
		1 m (39.4 in.)	JEPMC-W6012-01-E
		2 m (78.7 in.)	JEPMC-W6012-02-E
		3 m (118.1 in.)	JEPMC-W6012-03-E
		4 m (157.5 in.)	JEPMC-W6012-04-E
		5 m (196.9 in.)	JEPMC-W6012-05-E
		10 m (393.7 in.)	JEPMC-W6012-10-E
		20 m (787.4 in.)	JEPMC-W6012-20-E
		30 m (1181.1 in.)	JEPMC-W6012-30-E
		50 m (1968.5 in.)	JEPMC-W6012-50-E
MECHATROLINK-III connection with ferrite core	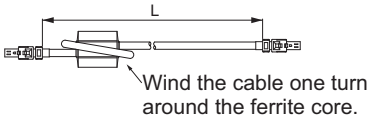	10 m (393.7 in.)	JEPMC-W6013-10-E
		20 m (787.4 in.)	JEPMC-W6013-20-E
		30 m (1181.1 in.)	JEPMC-W6013-30-E
		50 m (1968.5 in.)	JEPMC-W6013-50-E
		75 m (2952.8 in.)	JEPMC-W6013-75-E
		100 m (3937.0 in.)	JEPMC-W6013-100-E
MECHATROLINK-III connection with loose wires at one end	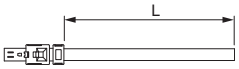	0.5 m (19.7 in.)	JEPMC-W6014-A5-E
		1 m (39.4 in.)	JEPMC-W6014-01-E
		3 m (118.1 in.)	JEPMC-W6014-03-E
		5 m (196.9 in.)	JEPMC-W6014-05-E
		10 m (393.7 in.)	JEPMC-W6014-10-E
		30 m (1181.1 in.)	JEPMC-W6014-30-E
		50 m (1968.5 in.)	JEPMC-W6014-50-E

15. Attach the option cover by aligning the tabs with the mounting holes, seat the front cover into place, and tighten the screw on the front.

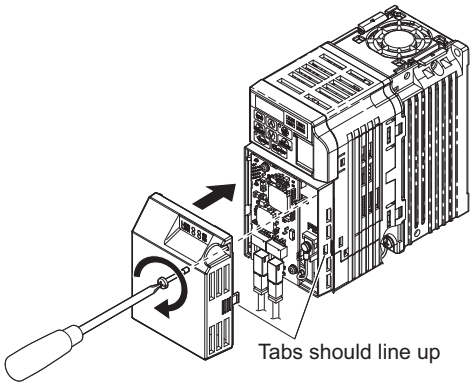

Figure 21 Attach the Option Cover

Note: Take proper precautions when wiring the option so that the front covers will easily fit back onto the drive. Make sure no cables are pinched between the front covers and the drive when replacing the covers.

16. Set drive parameters in *Table 4* for proper option performance.

6 Related Drive Parameters

The following parameters are used to set up the drive for operation with the option. Parameter setting instructions can be found in the drive instruction manual.

Confirm proper setting of the all parameters in *Table 8* using the digital operator before starting network communications.

Table 8 Related Parameter Settings

No. (Addr. Hex)	Name	Description	Values
b1-01 (180) <1>	Frequency Reference Selection	Selects the frequency reference input source. 0: Operator - Digital preset speed d1-01 to d1-17 1: Terminals - Analog input terminal A1 or A2 2: MEMOBUS/Modbus communications 3: Option 4: Pulse Input (Terminal RP)	Default: 1 Range: 0 to 4 (Set to 3)
b1-02 (181) <1>	Run Command Selection	Selects the run command input source. 0: Digital Operator - RUN and STOP keys 1: Digital input terminals S1 to S7 2: MEMOBUS/Modbus communications 3: Option	Default: 1 Range: 0 to 3 (Set to 3)
F6-01 (3A2)	Operation Selection after Communications Error	Determines drive response when a bUS error is detected during communications with the option. 0: Ramp to Stop 1: Coast to Stop 2: Fast-Stop 3: Alarm Only <2>	Default: 1 Range: 0 to 3
F6-02 (3A3)	External Fault Detection Conditions (EF0)	Sets the condition for external fault detection (EF0). 0: Always detected 1: Detected only during operation	Default: 0 Range: 0, 1
F6-03 (3A4)	Stopping Method for External Fault from the Communication Option	Determines drive response for external fault input (EF0) detection during option communications. 0: Ramp to Stop 1: Coast to Stop 2: Fast-Stop 3: Alarm Only <2>	Default: 1 Range: 0 to 3
F6-07 (3A8)	NetRef/ComRef Selection Function	0: Multi-step speed reference disabled (F7 functionality) 1: Multi-step speed reference allowed (V7 functionality)	Default: 1 Range: 0, 1
F6-08 (36A)	Reset Communication Related Parameters	Determines if communication-related parameters F6-□□ and F7-□□ are set back to original default values when the drive is initialized using parameter A1-03. 0: Do not reset parameters 1: Reset parameters	Default: 0 Range: 0, 1
F6-20 <3> <4>	MECHATROLINK Station Address	Sets the station number.	Default: 21H Range: 20 to 3FH
F6-21 <3>	MECHATROLINK Frame Size	Sets the frame size. 0: 64 byte 1: 32 byte	Default: 0 Range: 0, 1
F6-23 <3> <5>	MECHATROLINK Monitor Selection (Code 0EH)	Set MEMOBUS/Modbus register to monitor SEL_MON of INV_CTL and INV_CTL.	Default: 0H Range: 0 to FFFFH
F6-24 <3> <6>	MECHATROLINK Monitor Selection (Code 0FH)	Set MEMOBUS/Modbus register to monitor SEL_MON of INV_CTL and INV_CTL.	Default: 0H Range: 0 to FFFFH
F6-25	Operation Selection at Watchdog Error (E5)	0: Ramp to stop. Decelerate to stop using the deceleration time in C1-02. 1: Coast to stop. 2: Fast Stop. Decelerate to stop using the deceleration time in C1-09. 3: Alarm only.	Default: 1 Range: 0 to 3
F6-26	MECHATROLINK bUS Errors Detected	Sets the number of option communication errors (bUS).	Default: 2 Range: 2 to 10

<1> To start and stop the drive with the MECHATROLINK-III master device using serial communications, set b1-02 to 3. To control the frequency reference of the drive via the master device, set b1-01 to 3.
<2> If set to 3, then the drive will continue to operate when a fault is detected. Take proper measures such as installing an emergency stop switch.
<3> Power must be cycled in order for any setting changes to take affect.
<4> All station addresses must be unique. If set to 20 or 3F, a Station Address Error (AEr) will occur and the ERR light will turn on.
<5> Setting byte 10 of INV_CTL to 0EH enables the register set by F6-23. Byte 11 and 12 of the response data enable the register content set by F6-23. Refer to the drive instruction manual for details on the register that can be set.
<6> Setting byte 10 of INV_CTL to 0FH enables the register set by F6-24. Byte 11 and 12 of the response data enable the register content set by F6-24. Refer to the drive instruction manual for details on the register that can be set.

7 Transmission Interface

◆ MECHATROLINK-III Cyclic Transmissions

As a MECHATROLINK-III station, the SI-ET3/V exchanges control data and I/O data with a control device, such as a controller. Communications with the master are executed by sending response data timed to the reception of command data for the local station address from the master in each transmission cycle. The formats for the command and response data follow the specifications for the MECHATROLINK Drive commands.

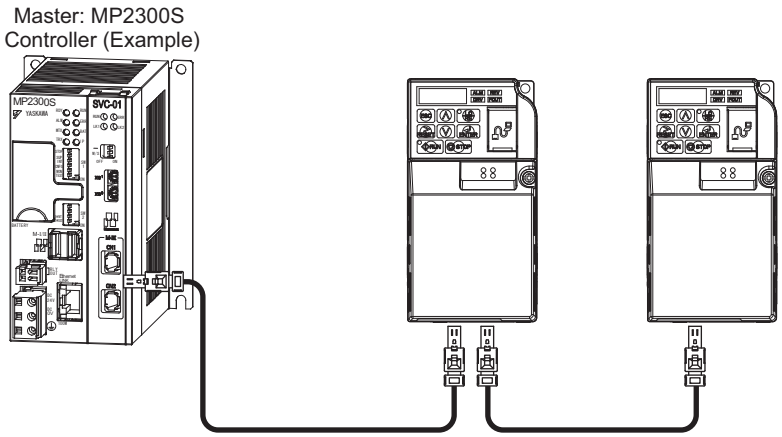

◆ Command Format of the Standard Profile Common Commands

This section describes the specifications of the standard profile common commands.

Table 9 shows the data format and the list of common commands of the commands and responses.

For standard inverter profile commands, the data length is fixed at 32 bytes for main commands and sub-commands.

Table 9 Command Format of the Standard Profile Common Commands

–	Byte	Command	Response	Reference
Main Commands	0	CMD	RCMD	• CMD/RCMD Command code specified for individual commands. Refer to *Main Command on page 29*. • WDT/RWDT Watchdog data is usually set automatically. • CMD_CTRL Refer to *Command Control (CMD_CTRL) on page 27*. • CMD_STAT Refer to *Command Status (CMD_STAT) on page 27*. • CMD_DATA/RSP_DATA Specified for individual commands. Refer to *Main Command on page 29*.
	1	WDT	RWDT	
	2	CMD_CTRL	CMD_STAT	
	3			
	4	CMD_DATA	RSP_DATA	
	5			
	6			
	7			
	8			
	9			
	10			
	11			
	12			
	13			
	14			
	15			
	16			
	17			
	18			
	19			
	20			
	21			
	22			
	23			
	24			
	25			
	26			
	27			
	28			
	29			
	30			
	31			
Sub-Commands	32	SUBCMD	RSUBCMD	• SUBCMD/RSUBCMD Command code specified for individual commands. Refer to *Sub-Commands on page 42*. • SUB_CTRL Refer to *SUB_CTRL (Sub-Command Control Field) on page 42*. • SUB_STAT Refer to *SUB_STAT (Sub-Command Status) on page 42*. • SUB_CMD_DATA/SUB_RSP_DATA Specified for individual commands. Refer to *Sub-Commands on page 42*.
	33	SUB_CTRL	SUB_STAT	
	34			
	35			
	36	SUB_CMD_DATA	SUB_RSP_DATA	
	37			
	38			
	·			
	·			
	59			
	60			
	61			

◆ Communications Phases

The SI-ET3/V changes status as described here when a command code or fault is received from the master.

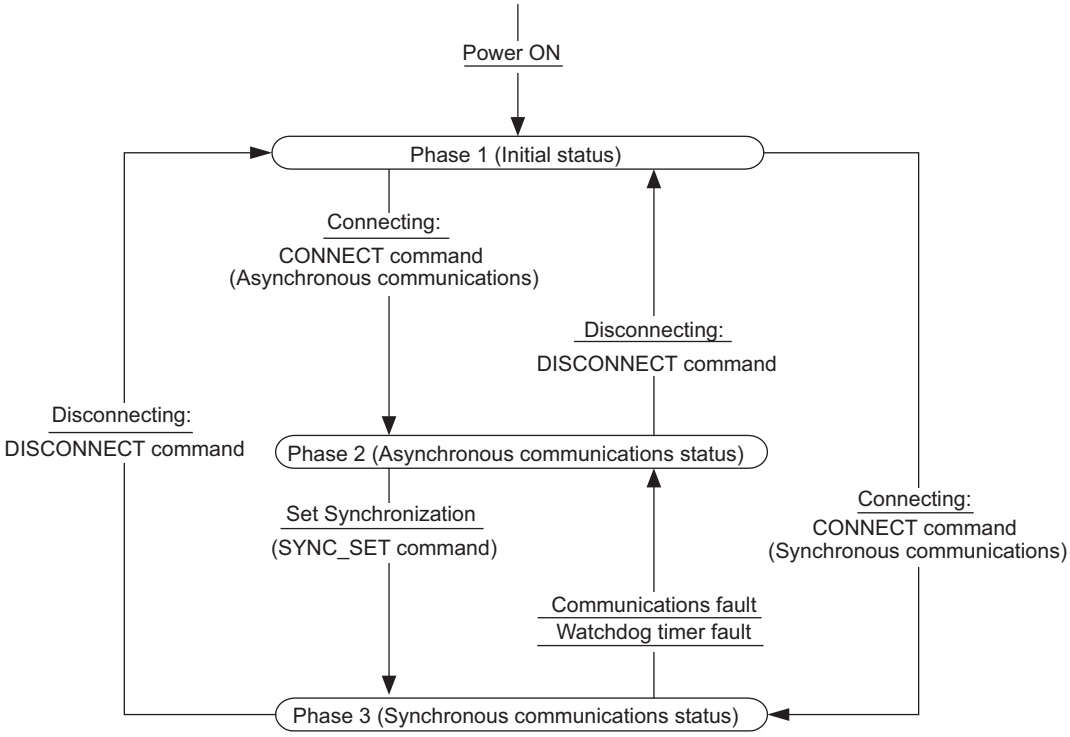

Figure 22 Communication phases

■ Phase 1: Initial status after power ON

Operation proceeds with a default transmission cycle of 2 ms. The transmission cycle is changed to the time indicated in the synchronous frame when a CONNECT command is received from the master. Then the phase moves to phase 2 or phase 3 after a response to the CONNECT command is returned.

Even if a transfer fault is detected in phase 1, no fault notification is provided.

■ Phase 2: Asynchronous communications

All SI-ET3/V commands can be used. Phase 2 starts to count the watchdog timer in the communications frame. The phase moves to phase 3 when a SYNC_SET command is received, and it moves to phase 1 when a DISCONNECT command is received.

■ Phase 3: Synchronous communications

Watchdog timer faults in the communications frame are detected. If the DISCONNECT command is received, the phase moves to phase 1. If a reception fault or a watchdog timer fault is detected, the phase moves to phase 2.

Available command is determined by communication phases. For details, refer to *Table 10* and *Table 11*.

Table 10 Main Command Communication Phases

Command	Code [HEX]	Contents	Communication Phase		
			1	2	3
NOP	00	No Operation Command	–	○	○
PRM_RD	01	Read Parameter Command	–	○	○
PRM_WR	02	Write Parameter Command	–	○	○
ID_RD	03	Read ID Command	–	○	○
CONFIG	04	Setup Device Command	–	○	○
ALM_RD	05	Read Alarm or Warning Command	–	○	○
ALM_CLR	06	Clear Alarm or Warning Command	–	○	○
SYNC_SET	0D	Start Synchronous Communication Command	–	○	Δ
CONNECT	0E	Establish Connection Command	○	Δ	Δ
DISCONNECT	0F	Release Connection Command	○	○	○
INV_CTL	50	Inverter Operation Control Command	–	○	○

○: Can be executed
Δ: Ignored
–: Cannot be executed (phase error)

Table 11 Sub-Command Communication Phases

Command	Code [HEX]	Contents	Communication Phase		
			1	2	3
NOP	00	No Operation Command	–	○	○
PRM_RD	01	Read Parameter Command	–	○	○
PRM_WR	02	Write Parameter Command	–	○	○
ALM_RD	05	Read Alarm or Warning Command	–	○	○
INV_IO	51	Drive I/O Control Command	–	○	○

○: Can be executed
Δ: Ignored
–: Cannot be executed (phase error)

◆ Application Layer Specifications

The data format for the application layer conforms to the MECHATROLINK-III command specifications for standard inverter profile.

SI-ET3/V has the following main commands and sub-commands.

Table 12 Main Commands

Code [HEX]	Name	Function
00	NOP	No Operation Command
01	PRM_RD	Read Parameter Command
02	PRM_WR	Write Parameter Command
03	ID_RD	Read ID Number Command
04	CONFIG	RAM Write and EEPROM Write Command
05	ALM_RD	Read Alarm and Warning Command
06	ALM_CLR	Clear Alarm and Warning Command
0D	SYNC_SET	Start Synchronous Communications Command
0E	CONNECT	Connect Command
0F	DISCONNECT	Disconnect Command
50	INV_CTL	Inverter Operation Control Command

Table 13 Sub-Commands

Code [HEX]	Name	Function
00	NOP	No Operation Command
01	PRM_RD	Read Parameter Command
02	PRM_WR	Write Parameter Command
05	ALM_RD	Read Alarm and Warning Command
51	INV_I/O	Inverter I/O Control Command

The sub-commands can be used only when the 64-byte data transmission (F6-21 = 0) has been selected. If a conflict occurs between a request for a main command and a request for a sub-command, the request for the main command is processed. If either a main command or a sub-command is already being processed, the command being processed is given priority. If an INV_CTL main command and an INV_I/O sub-command conflict, the sub-command is given priority.

For details on command formats, refer to *MECHATROLINK-III Commands on page 27*.

Table 14 shows the combination of main commands and sub-commands.

Table 14 Main Commands and Sub-Commands

Code [HEX]	Main Command	Sub-Command				
		NOP (00H)	PRM_RD (01H)	PRM_WR (02H)	ALM_RD (05H)	INV_I/O (51H)
00	NOP	OK	OK	OK	OK	OK
01	PRM_RD	OK	–	–	OK	OK
02	PRM_WR	OK	–	–	OK	OK
03	ID_RD	OK	OK	OK	OK	OK
04	CONFIG	OK	–	–	–	–
05	ALM_RD	OK	–	–	–	–
06	ALM_CLR	OK	–	–	–	–
0D	SYNC_SET	OK	OK	OK	OK	OK
0E	CONNECT	OK	–	–	–	–
0F	DISCONNECT	OK	–	–	–	–
50	INV_CTL	OK	OK	OK	OK	OK

Note: CMD_ALM = BH (sub-command combination error) will result if a main command and sub-command conflict with one another.

8 MECHATROLINK-III Commands

◆ Command Control (CMD_CTRL)

bit 7	bit 6	bit 5	bit 4	bit 3	bit 2	bit 1	bit 0
CMD_ID		Reserved (0)	Reserved (0)	ALM_CLR	Reserved (0)	Reserved (0)	Reserved (0)
bit 15	bit 14	bit 13	bit 12	bit 11	bit 10	bit 9	bit 8
Reserved (0)							

Command	Description
CMD_ID	This is not used with standard inverter profile commands.
ALM_CLR	0: Clear alarm/warning disabled 1: Clear alarm/warning triggered The same processing as when ALM_CLR_MODE = 0 for the ALM_CLR command (the current alarm/warning state is cleared) is performed.

■ Command Status (CMD_STAT)

bit 7	bit 6	bit 5	bit 4	bit 3	bit 2	bit 1	bit 0
RCMD_ID		Reserved (0)	Reserved (0)	ALM_CLR_CMP	CMDRDY	D_WAR	D_ALM
bit 15	bit 14	bit 13	bit 12	bit 11	bit 10	bit 9	bit 8
COMM_ALM				CMD_ALM			

Command	Description
RCMD_ID	The slave returns the echo of the CMD_ID as the RCMD_ID.
ALM_CLR_CMP	ALM_CLR_CMP = 1 means that CMD_CTRL.ALM_CLR = 1 has been received and alarm clear processing has been completed.
CMDRDY	1: Command reception enabled 0: Other
D_WAR	0: Normal operation 1: The device is in the warning state.
D_ALM	0: Normal operation 1: The device is in the alarm state.
COMM_ALM	Notifies the communication error state. COMM_ALM is independent of CMD_ALM, D_ALM and D_WAR. COMM_ALM is cleared at the leading edge of CMD_CTRL.ALM_CLR or by the ALM_CLR command. Refer to *COMM_ALM on page 27* for details.
CMD_ALM	Notifies the command error state. If a normal command is received after the occurrence of a command error, CMD_ALM is automatically cleared. Refer to *COMM_ALM on page 27* for details.

■ COMM_ALM

Code [HEX]		Contents
–	0	Normal
Warning	1	Frame Check Sequence (FCS) error
	2	Command data not received
	3	Synchronous frame not received
Alarm	8	Frame Check Sequence (FCS) error
	9	Command data not received
	A	Synchronous frame not received
	B	Synchronization interval error
	C	WDT error

■ CMD_ALM

Code [HEX]		Contents
–	0	Normal
Warning	1	Invalid data
Alarm	8	Unsupported command received
	9	Invalid data
	A	Command execution condition error
	B	Sub-command combination error
	C	Phase error

9 Main Command

◆ NOP: 00H (No Operation Command)

The NOP command is used for network control. The current state is returned as a response. The command can be used in all communication phases.

NOP command		
Byte	**Command**	**Description**
0	NOP (00H)	Command code
1	WDT	Watchdog data
2	CMD_CTRL	Refer to *Command Control (CMD_CTRL) on page 27*.
3		
4	Reserved (0)	Not used
5		
·		
·		
31		

NOP Response		
Byte	**Response**	**Description**
0	NOP (00H)	Command code
1	RWDT	Watchdog data
2	CMD_STAT	Refer to *Command Status (CMD_STAT) on page 27*.
3		
4	Reserved (0)	Not used
5		
·		
·		
31		

◆ PRM_RD: 01H (Read Parameter Command)

The PRM_RD command is used to read a parameter by specifying the parameter number and the data size.

The command can be used in communication phases 2 and 3. Refer to the drive instruction manual for details of MEMOBUS/Modbus register numbers.

PRM_RD command		
Byte	**Command**	**Description**
0	PRM_RD (01H)	Command code
1	WDT	Watchdog data
2	CMD_CTRL	Refer to *Command Control (CMD_CTRL) on page 27*.
3		
4	NO	MEMOBUS/Modbus register number (Lower)
5		MEMOBUS/Modbus register number (Upper)
6	SIZE	Data size to read [units: byte] Available setting values are 2, 4, 6, and 8.
7	Reserved (0)	Not used
8	Reserved (0)	
9		
10		
·		
·		
31		

PRM_RD Response		
Byte	**Response**	**Description**
0	PRM_RD (01H)	Command code
1	RWDT	Watchdog data
2	CMD_STAT	Refer to *Command Status (CMD_STAT) on page 27*. If the SIZE data is invalid or MEMOBUS/Modbus register number does not exist, “9” is set for CMD_ALM.
3		
4	NO	MEMOBUS/Modbus register number (Lower) set in the command.
5		MEMOBUS/Modbus register number (Upper) set in the command.
6	SIZE	The SIZE is the same as the register number set in MEMOBUS/Modbus transfers.
7	Reserved (0)	0 is set.
8	PARAMETER	Sets the data read in the byte set in the command. The option stores the data read for PARAMETER from lower byte (LSB) to upper byte (MSB). 0 is stored when the field is not used. 0 is stored in PARAMETER when command error occurs.
9		
10		
·		
·		
31		

Example: Reading C1-01 (200H)

Byte	Command	Response
4	00H	00H
5	02H	02H
6	02H	02H
7	00H	00H
8	00H	Value set to C1-01 (Lower)
9	00H	Value set to C1-01 (Upper)

◆ PRM_WR: 02H (Write Parameter Sub-Command)

The PRM_WR command is used to write a parameter by specifying the parameter number, data size, and parameter data. The command can be used in communication phases 2 and 3. The CONFIG command must be sent to set up after the parameters are written. Refer to the drive instruction manual for details of MEMOBUS/Modbus register numbers.

PRM_WR Command		
Byte	**Command**	**Description**
0	PRM_WR (02H)	Command code
1	WDT	Watchdog data
2	CMD_CTRL	Refer to *Command Control (CMD_CTRL) on page 27*.
3		
4	NO	MEMOBUS/Modbus register number (Lower)
5		MEMOBUS/Modbus register number (Upper)
6	SIZE	Set the data size in byte. Available setting values are 2, 4, 6, and 8
7	Reserved (0)	Not used
8	PARAMETER	Specify the lower byte (LSB) before the upper byte (MSB) in the size set in the SIZE.
9		
10		
·		
·		
31		

PRM_WR Response		
Byte	**Response**	**Description**
0	PRM_WR (02H)	Command code
1	RWDT	Watchdog data

PRM_WR Response		
Byte	**Response**	**Description**
2	CMD_STAT	Refer to *Command Status (CMD_STAT) on page 27*. If the SIZE data is invalid, “9” is set for CMD_ALM.
3		
4	NO	MEMOBUS/Modbus register number (Lower) set in the command.
5		MEMOBUS/Modbus register number (Upper) set in the command.
6	SIZE	The value set in the command.
7	Reserved (0)	0 is set.
8	PARAMETER	The value set in the command. 0 is stored when the field is not used.
9		
10		
·		
·		
31		

In the following status, an alarm is detected and the command goes into error.

Error	Response
Register Number Error	“9” is set for CMD_ALM.
Bit Count Error	“9” is set for CMD_ALM.
Data Setting Error	“9” is set for CMD_ALM.
Write Mode Error	“9” is set for CMD_ALM.
Writing Error during Under Voltage	“9” is set for CMD_ALM.
Writing Error during Parameter Processing	“9” is set for CMD_ALM.

Example: Writing C1-01 (200H)

Byte	Command	Response
4	00H	00H
5	02H	02H
6	02H	02H
7	00H	00H
8	Value set to C1-01 (Lower)	Value set to C1-01 (Lower)
9	Value set to C1-01 (Upper)	Value set to C1-01 (Upper)

◆ ID_RD: 03H (Read ID Command)

The ID_RD command is used to read the ID of a device. This command reads the product information as ID data.

ID_RD command		
Byte	**Command**	**Description**
0	ID_RD (03H)	Command code
1	WDT	Watchdog data
2	CMD_CTRL	Refer to *Command Control (CMD_CTRL) on page 27*.
3		
4	ID_CODE	Specifies the ID_CODE. Refer to *Table 15* for details.
5	OFFSET	Set the offset in byte.
6	SIZE	Set the size in byte. (Lower)
7		Set the size in byte. (Upper)
8	Reserved (0)	Not used
·		
·		
31		

ID_RD Response		
Byte	**Response**	**Description**
0	ID_RD (03H)	Command code
1	RWDT	Watchdog data
2	CMD_STAT	Refer to *Command Status (CMD_STAT) on page 27*.
3		
4	ID_CODE	MEMOBUS/Modbus register number (Lower) set in the command.
5	OFFSET	MEMOBUS/Modbus register number (Upper) set in the command.
6	SIZE	The value set in the command.
7		
8	ID	ID data is stored. Refer to *Table 15* for details.
·		
·		
31		

Table 15 ID_CODE

ID_CODE	Name	Size	Description
01H	Vendor ID Code	4 byte	0000H
02H	Device Code	4 byte	A code specific to each device.
03H	Device Version	4 byte	Version information of device
04H	Device Definition File Version	4 byte	0000H
05H	Extended Address Setting	4 byte	0001H (Multi-slave is not available)
10H	Profile type 1 (Primary)	4 byte	0020H (Inverter profile)
11H	Profile Version 1 (Primary)	4 byte	0100H
12H	Profile Type 2	4 byte	00FFH (Not available)
13H	Profile Version 2	4 byte	0000H (Not available)
14H	Profile Type 3	4 byte	00FFH (Not available)
15H	Profile Version 3	4 byte	0000H (Not available)
16H	Minimum Value of Transmission Cycle	4 byte	25000 (250 µs) [unit: 0.01 µs]
17H	Maximum Value of Transmission Cycle	4 byte	800000 (8 ms) [unit: 0.01 µs]
18H	Transmission Cycle Increment (Granularity)	4 byte	03H (Supports 31.25 [µs], 62.5 [µs], 125 [µs], 250 [µs], 500 [µs], 750 [µs], 1 to 64 [ms] (0.5 ms increment))
19H	Minimum Value of Communication Cycle	4 byte	25000 (250 µs) [unit: 0.01 µs]
1AH	Maximum Value of Communication Cycle	4 byte	3200000 (32 ms) [ms: 0.01 µs]
1BH	Number of Transmission Bytes	4 byte	00000014H (64 byte, 32 byte)
1CH	Number of Transmission Bytes (Current Setting)	4 byte	The number of transmission bytes for cyclic communication that is currently set for the device.
1DH	Profile Type (Current Selection)	4 byte	This is the profile selected with the CONNECT command.
20H	Supported Communication Mode	4 byte	00000003H (Cyclic communication/event driven communication)
30H	List of Supported Main Commands	32 byte	The list of the main commands that the device supports.
38H	List of Supported Sub-Commands	32 byte	The list of the sub-commands that the device supports.
40H	List of Supported Common Parameters	32 byte	0
48H	Speed reference unit/Output reference unit	4 byte	0: 0.01 Hz units 1: 0.01% units 2: min^{-1} (r/min) units 3: Units in the product specifications 4 and above: Reserved
49H	Torque Reference Unit	4 byte	0: 0.1% units
4AH	Output Current Unit	4 byte	0: 0.1 A units

Access the MECHATROLINK Members Association web site http://www.mechatrolink.org/ for details on the ID_CODE.

◆ CONFIG: 04H (Setup Device Command)

The CONFIG command is used to force the parameters written using PRM_WR to become effective, and optionally store the parameters into EEPROM. The command can be used in communication phases 2 and 3.

CONFIG Command		
Byte	**Command**	**Description**
0	CONFIG (04H)	Command code
1	WDT	Watchdog data
2	CMD_CTRL	Refer to *Command Control (CMD_CTRL) on page 27*
3		
4	CONFIG_MOD	Specify the type of setup. Refer to *Table 16* for details.
5	Reserved (0)	Not used
6		
7		
·		
·		
31		

CONFIG Response		
Byte	**Command**	**Description**
0	CONFIG (04H)	Command code
1	RWDT	Watchdog data
2	CMD_STAT	Refer to *Command Status (CMD_STAT) on page 27*.
3		
4	CONFIG_MOD	The value set in the command
5	Reserved (0)	Not used
6		
7		
·		
·		
31		

The values available in CONFIG_MOD are listed in *Table 16*.

Table 16 CONFIG_MOD

CONFIG_MOD	Description
0	RAM Write The setting value is not stored in EEPROM.
1	The setting value is stored in EEPROM. **Note:** The EEPROM can only be written to 100,000 times, so it is recommended to limit the number of times writing to the EEPROM. Issue the CONFIG command after changing all the parameters.

◆ ALM_RD: 05H (Read Alarm or Warning Command)

The ALM_RD command is used to read the alarm or warning state. The command can be used in communication phases 2 and 3.

The current alarm or warning state is read from ALM_DATA as an alarm or warning code. Refer to the drive instruction manual for details about ALM_DATA.

ALM_RD Command		
Byte	**Command**	**Description**
0	ALM_RD (05H)	Command code
1	WDT	Watchdog data

ALM_RD Command		
Byte	**Command**	**Description**
2	CMD_CTRL	Refer to *Command Control (CMD_CTRL) on page 27*.
3		
4	ALM_RD_MOD	Specify the alarm or warning state. (Lower)
5		Specify the alarm or warning state. (Upper)
6	ALM_INDEX	Specify the alarm index. The command is enabled when ALM_RD_MODE is 2. (Lower)
7		Specify the alarm index. The command is enabled when ALM_RD_MODE is 2. (Upper)
8	Reserved (0)	Not used
9		
10		
·		
·		
31		

ALM_RD Response		
Byte	**Response**	**Description**
0	ALM_RD (05H)	Command code
1	RWDT	Watchdog data
2	CMD_STAT	Refer to *Command Status (CMD_STAT) on page 27*.
3		
4	ALM_RD_MOD	The value set in the command
5		
6	ALM_INDEX	The value set in the command
7		
8	ALM_DATA	ALM_DATA specifies an alarm using 2 bytes.
9		
10		
·		
·		
31		

Table 17 ALM_RD_MOD

Byte	ALM_RD_MOD = 0	ALM_RD_MOD = 1	ALM_RD_MOD = 2
4	00H	01H	02H
5	00H	00H	00H
6	–	–	ALM_INDEX (Lower)
7	–	–	ALM_INDEX (Upper)
8	U2-01 (Lower)	U3-01 (Lower)	ALM_INDEX = 0: U2-01 (Lower) ALM_INDEX ≠ 0: U3-(ALM_INDEX) (Lower)
9	U2-01 (Upper)	U3-01 (Upper)	ALM_INDEX = 0: U2-01 (Upper) ALM_INDEX ≠ 0: U3-(ALM_INDEX) (Upper)
10	U2-02 (Lower)	U3-02 (Lower)	–
11	U2-02 (Upper)	U3-02 (Upper)	–
12	–	U3-03 (Lower)	–
13	–	U3-03 (Upper)	–
14	–	U3-04 (Lower)	–
15	–	U3-04 (Upper)	–
16	–	U3-05 (Lower)	–
17	–	U3-05 (Upper)	–
18	–	U3-06 (Lower)	–
19	–	U3-06 (Upper)	–
20	–	U3-07 (Lower)	–

Byte	ALM_RD_MOD = 0	ALM_RD_MOD = 1	ALM_RD_MOD = 2
21	–	U3-07 (Upper)	–
22	–	U3-08 (Lower)	–
23	–	U3-08 (Upper)	–
24	–	U3-09 (Lower)	–
25	–	U3-09 (Upper)	–
26	–	U3-10 (Lower)	–
27	–	U3-10 (Upper)	–

Table 18 ALM_DATA

ALM_RD_MOD	Description	
0	Present fault (Byte 6), Fault history Byte 8 to 11	U2-01, U2-02
1	Alarm status list (Byte 8 to 27)	U3-01 to U3-10
2	Fault history (Alarms are not saved in the history.) (Byte 8 to 9)	U2-01, U3-01 to U3-10

◆ ALM_CLR: 06H (Clear Alarm or Warning Command)

The ALM_CLR command is used to clear the alarm or warning state. The command can be used in communication phases 2 and 3.

This command changes the state of a slave station, it does not remove the cause of a fault. After the cause of the alarm or warning has been removed, this command is then used to clear the status of the alarm or warning.

ALM_RD Command		
Byte	Command	Description
0	ALM_RD (06H)	Command code
1	WDT	Watchdog data
2	CMD_CTRL	Refer to *Command Control (CMD_CTRL) on page 27*.
3		
4	ALM_CLR_MOD	0: Clears the status of present faults and alarms.
5		
6	Reserved (0)	Not used
7		
·		
·		
31		

ALM_RD Response		
Byte	Command	Description
0	ALM_RD (06H)	Command code
1	RWDT	Watchdog data
2	CMD_STAT	Refer to *Command Status (CMD_STAT) on page 27*.
3		
4	ALM_CLR_MOD	The value set in the command
5		
6	Reserved (0)	Not used
7		
·		
·		
31		

◆ SYNC_SET: 0DH (Start Synchronous Communication Command)

The SYNC_SET command is used to start synchronous communications. After this command is issued, synchronous communications are carried out. If communications become asynchronous due to any fault such as a communications fault, this command can be used to restore synchronous communications. The command can be used in communication phases 2 and 3. Watchdog data error detection commences when this command has been completed.

SYNC_SET command		
Byte	**Command**	**Description**
0	SYNC_SET (0DH)	Command code
1	WDT	Watchdog data
2	CMD_CTRL	Refer to *Command Control (CMD_CTRL) on page 27*.
3		
4	Reserved (0)	Not used
5		
6		
7		
·		
·		
31		

SYNC_SET Response		
Byte	**Command**	**Description**
0	SYNC_SET (0DH)	Command code
1	RWDT	Watchdog data
2	CMD_STAT	Refer to *Command Status (CMD_STAT) on page 27*.
3		
4	Reserved (0)	Not used
5		
6		
7		
·		
·		
31		

◆ CONNECT: 0EH (Establish Connection Command)

The CONNECT command is used to establish a MECHATROLINK connection. After the connection is established, the phase moves to communication phase 2 and 3.

CONNECT Command		
Byte	**Command**	**Description**
0	CONNECT (0EH)	Command code
1	WDT	Watchdog data
2	CMD_CTRL	Refer to *Command Control (CMD_CTRL) on page 27*.
3		
4	VER	Specify 30H.
5	COM_MOD	Specify the Communication Mode (COM_MOD). Refer to *Table 19* for details.
6	COM_TIM	1 to 255 Sets multiples of the transmission cycle as the communication cycle.
7	PROFILE_TYPE	Specify PROFILE_TYPE = 20H.
8	Reserved (0)	Not used
·		
·		
31		

CONNECT Response		
Byte	**Command**	**Description**
0	CONNECT (0EH)	Command code
1	RWDT	Watchdog data

CONNECT Response		
Byte	**Command**	**Description**
2	CMD_STAT	Refer to *Command Status (CMD_STAT) on page 27*.
3		
4	VER	The value set in the command
5	COM_MOD	The value set in the command
6	COM_TIM	The value set in the command
7	PROFILE_TYPE	The value set in the command
8	Reserved (0)	Not used
.		
.		
31		

Table 19 COM_MOD

bit 7	bit 6	bit 5	bit 4	bit 3	bit 2	bit 1	bit 0
SUBCMD	0	0	0	DTMODE		SYNCMODE	0

Table 20 COM_MOD Bits

Bit	Name	Value	Description
SUBCMD	Sub-command setting	0	Sub-command disabled
		1	Sub-command enabled
DTMODE	Data transfer method	0	Single transmission
SYNCMODE	Synchronization setting	0	Performs synchronous communication
		1	Performs asynchronous communication

◆ DISCONNECT: 0FH (Release Connection Command)

The DISCONNECT command is used to release the connection. When this command is completed, the communication phase shifts to communication phase 1.

DISCONNECT Command		
Byte	**Command**	**Description**
0	DISCONNECT (0FH)	Command code
1	Reserved (0)	Not used
.		
.		
31		

DISCONNECT Response		
Byte	**Response**	**Description**
0	DISCONNECT (0FH)	Command code
1	Reserved (0)	Not used
.		
.		
31		

◆ INV_CTL: 50H (Inverter Operation Control Command)

The INV_CTL command is used to set the drive operation signals, speed references, and so on. Units for speed reference and output frequency are determined by parameter o1-03. This command can be used in communication phases 2 and 3.

INV_CTL Response		
Byte	**Response**	**Description**
0	INV_CTL (50H)	Command code
1	WDT	Watchdog data

INV_CTL Response		
Byte	**Response**	**Description**
2	CMD_CTRL	Refer to *Command Control (CMD_CTRL) on page 27*
3		
4	INVCMD_CTRL	Refer to *INVCMD_CTRL on page 38*.
5		
6		
7		
8	INVCMD_IO	Refer to *INVCMD_IO Command on page 39*.
9		
10		
11		
12	Speed reference	Speed Reference (Lower)
13		Speed Reference (Upper)
14		Not used (Set to 0.)
15		Not used (Set to 0.)
16	Torque reference	Torque Reference (Lower)
17		Torque Reference (Upper)
18		Not used (Set to 0.)
19		Not used (Set to 0.)
20	SEL_REF1/2	Use the SEL REF1/2 command to select the contents of REF1 with bits 0 to 3 and to select the contents of REF2 with bits 4 to 7. Refer to *Table 22* for the selection ranges for SEL REF1/2 and SEL MON1/2.
21	SEL_MON1/2	Use the SEL MON1/2 command to select the contents of MON1 with bits 0 to 3 and to select the contents of MON2 with bits 4 to 7.
22	Reserved (0)	Not used (Set to 0.)
23		
24	Reference selected with SEL_REF1	Reference selected with SEL_REF1 (Lower)
25		Reference selected with SEL_REF1 (Upper)
26		Not used (Set to 0.)
27		Not used (Set to 0.)
28	Reference selected with SEL_REF2	Reference selected with SEL_REF2 (Lower)
29		Reference selected with SEL_REF2 (Upper)
30		Not used (Set to 0.)
31		Not used (Set to 0.)

■ INVCMD_CTRL

Vender Specific						bit 1	bit 0
bit 7	bit 6	bit 5	bit 4	bit 3	bit 2		
Not used						Reverse operation	Forward operation
Vender Specific						bit 9	bit 8
bit 15	bit 14	bit 13	bit 12	bit 11	bit 10		
Not used			Refer to *Table 21*.			Fault reset	Reserved (0)
Vender Specific							
bit 23	bit 22	bit 21	bit 20	bit 19	bit 18	bit 17	bit 16
Not used		Multi-Function Input Terminal 3 to 8					
bit 31	bit 30	bit 29	bit 28	bit 27	bit 26	bit 25	bit 24
Reserved (0)							

Table 21 INVCMD_CTRL Bits

Bit	Name	Description
0	Forward operation	0: Stop 1: Forward operation
1	Reverse operation	0: Stop 1: Reverse operation
9	Fault reset	1: Fault reset

Bit	Name	Description
10	External fault (EF0)	1: External fault input (EF0)
11	Clear the fault history	1: Clear fault history
12	External base block reference	1: External base block reference ON
16	Multi-function input terminal 3	Multi-function input terminal S3 0: Multi-function input terminal S3 is OFF 1: Multi-function input terminal S3 is ON
17	Multi-function input terminal 4	Multi-function input terminal S4 0: Multi-function input terminal S4 is OFF 1: Multi-function input terminal S4 is ON
18	Multi-function input terminal 5	Multi-function input terminal S5 0: Multi-function input terminal S5 is OFF 1: Multi-function input terminal S5 is ON
19	Multi-function input terminal 6	Multi-function input terminal S6 0: Multi-function input terminal S6 is OFF 1: Multi-function input terminal S6 is ON
20	Multi-function input terminal 7	Multi-function input terminal S7 0: Multi-function input terminal S7 is OFF 1: Multi-function input terminal S7 is ON
21	Multi-function input terminal 8	Multi-function input terminal S8 0: Multi-function input terminal S8 is OFF 1: Multi-function input terminal S8 is ON

■ INVCMD_IO Command

Vender Specific							
bit 7	bit 6	bit 5	bit 4	bit 3	bit 2	bit 1	bit 0
Not used							
Vender Specific							
bit 15	bit 14	bit 13	bit 12	bit 11	bit 10	bit 9	bit 8
Not used							
Vender Specific							
bit 23	bit 22	bit 21	bit 20	bit 19	bit 18	bit 17	bit 16
Not used							
bit 31	bit 30	bit 29	bit 28	Vender Specific			
				bit 27	bit 26	bit 25	bit 24
Reserved (0)				Not used			

Table 22 SEL_REF Reference Data Codes

Selection Code	Monitor Name	Contents
0	Nothing Selected	–
1	Torque Compensation	Unit: 0.1%
2	Analog Output Terminal 1 Output	Enabled when H4-01 = 000
3	Analog Output Terminal 2 Output	Enabled when H4-01 = 000
4	Terminal Output	–
5	PID Setpoint	Unit: 0.01%
6	Pulse Output	Unit: 1 Hz
7	V/f Gain	–
8	Not used	–
9	Control Selection Setting	Bit 1: PID setpoint enabled

Table 23 SEL_MON Monitor Data Codes

Selection Code	Monitor Name	Contents
0	Nothing Selected	–
1	Motor Speed	Displayed in U1-05 and determined by o1-03.
2	Torque Reference (Monitor)	Displayed in U1-09 (0.1%).
3	Not used	–
4	Frequency Reference	Displayed in U1-01 and determined by o1-03.
5	Analog Input Terminal A2	Displayed in U1-14 (0.1%).

Selection Code	Monitor Name	Contents
6	DC Bus Voltage	Displayed in U1-07 (1 V).
7	Inverter Alarm	–
8	Inverter Warning	–
9	Multi-Function Output Terminal Status	Displayed in U1-11.
A	Analog Input Terminal	Displayed in U1-15 (0.1%).
B	Multi-Function Input Terminal Status S1 to S8	Displayed in U1-10.
C	Analog Input Terminal	Displayed in U1-13 (0.1%).
D	Speed Detection PG2 Counter	–
E	Monitor Data Set to F6-23	–
F	Monitor Data Set to F6-24	–

■ INV_CTL Response

INV_CTL Response		
Byte	Response	Contents
0	INV_CTL (50H)	Command code
1	RWDT	Watchdog data
2	CMD_STAT	Refer to *Command Status (CMD_STAT) on page 27*.
3		
4	INVCMD_STAT	Refer to *INVCMD_CTRL on page 38*.
5		
6		
7		
8	INVCMD_IO	Refer to *INVCMD_IO Command on page 39*.
9		
10		
11		
12	Output Frequency	Output Frequency (Lower)
13		Output Frequency (Upper)
14		Not used (Set to 0.)
15		Not used (Set to 0.)
16	Output Current	Output current (Lower)
17		Output current (Upper)
18		Not used (Set to 0.)
19		Not used (Set to 0.)
20	SEL_REF1/2	The value set in the command.
21	SEL_MON1/2	The value set in the command.
22	Reserved (0)	Not used (Set to 0.)
23		
24	Monitor data set to SEL_MON1	Monitor data set to SEL_MON1 (Lower)
25		Monitor data set to SEL_MON1 (Upper)
26		Not used (Set to 0.)
27		Not used (Set to 0.)
28	Monitor data set to SEL_MON2	Monitor data set to SEL_MON2 (Upper)
29		Monitor data set to SEL_MON2 (Upper)
30		Not used (Set to 0.)
31		Not used (Set to 0.)

■ INVCMD_STAT

Vender Specific						bit 1	bit 0
bit 7	bit 6	bit 5	bit 4	bit 3	bit 2		
oPE Error	Drive Ready	Speed Agree	Zero Servo	Main Power Supply ON	Basblock Released	Reverse Operation	Forward Operation
Vender Specific						bit 9	bit 8
bit 15	bit 14	bit 13	bit 12	bit 11	bit 10		
Not used		Zero Servo	Motor 2 Selection	LOCAL/ REMOTE	Power Loss Recovery/ Momentary Power Loss Recovery	Fault reset Signal Input	Reserved (0)
Vender Specific							
bit 23	bit 22	bit 21	bit 20	bit 19	bit 18	bit 17	bit 16
Not used							
bit 31	bit 30	bit 29	bit 28	bit 27	bit 26	bit 25	bit 24
Reserved (0)						SEL_MON2 Status	SEL_MON1 Status

Bit	Name	Description
0	Forward Operation	0: Stop 1: Forward operation in progress
1	Reverse Operation	0: Stop 1: Reverse operation in progress
2	Baseblock Released	0: Baseblock 1: Baseblock released
3	Main Power Supply ON	0: Main power supply OFF 1: Main power supply ON
4	Zero speed	1: Zero Speed
5	Speed Agree	1: Speed agree
6	Drive Ready	1: Drive ready
7	oPE Error	1: oPE error
9	Fault Reset Signal being Input	1: Fault reset signal being input
10	Power Loss Recovery/ Momentary Power Loss Recovery	0: Power loss recovery 1: Momentary power loss recovery
11	LOCAL/REMOTE	0: LOCAL 1: REMOTE
12	Motor 2 Selection	0: Motor 1 1: Motor 2
13	Zero Servo	1: Zero servo
24	SEL_MON1 Status	0: Disabled 1: SEL_MON1 enabled
25	SEL_MON2 Status	0: Disabled 1: SEL_MON2 enabled

■ INVCMD_IO Response

Vender Specific							
bit 7	bit 6	bit 5	bit 4	bit 3	bit 2	bit 1	bit 0
Not used							
Vender Specific							
bit 15	bit 14	bit 13	bit 12	bit 11	bit 10	bit 9	bit 8
Not used							
Vender Specific							
bit 23	bit 22	bit 21	bit 20	bit 19	bit 18	bit 17	bit 16
Not used							
bit 31	bit 30	bit 29	bit 28	Vender Specific			
				bit 27	bit 26	bit 25	bit 24
Reserved (0)				Not used			

10 Sub-Commands

Sub-commands can be used when the 64-byte data transmission (F6-21 = 0) has been selected.

◆ SUB_CTRL (Sub-Command Control Field)

Table 24 SUB_CTRL

bit 7	bit 6	bit 5	bit 4	bit 3	bit 2	bit 1	bit 0
Reserved (0)							
bit 15	bit 14	bit 13	bit 12	bit 11	bit 10	bit 9	bit 8
Reserved (0)							
bit 23	bit 22	bit21	bit 20	bit 19	bit 18	bit 17	bit 16
Reserved (0)							

◆ SUB_STAT (Sub-Command Status)

Table 25 SUB_STAT

bit 7	bit 6	bit 5	bit 4	bit 3	bit 2	bit 1	bit 0
Not used (Set to 0.)				Reserved (0)	SUBCMDRDY	Not used	
bit 15	bit 14	bit 13	bit 12	bit 11	bit 10	bit 9	bit 8
Reserved (0)				SUBCMD_ALM			
bit 23	bit 22	bit 21	bit 20	bit 19	bit 18	bit 17	bit 16
Reserved (0)							

Command	Description
SUBCMDRDY	0: Sub-command reception disabled 1: Sub-command reception enabled
SUBCMD_ALM	Notifies the sub-command error state. If a normal sub-command is received after the occurrence of a sub-command error, SUBCMD_ALM is automatically cleared.

Table 26 SUBCMD_ALM

Code		Contents
–	0H	Normal
Warning	1H	Invalid data
Alarm	8H	Unsupported command received
	9H	Invalid data
	AH	Invalid data
	BH	Sub-command combination error
	CH	Phase error

■ NOP: 00H (No Operation Command)

The NOP command is used for network control. The current state is returned as a response. The command can be used in all communication phases.

NOP Command		
Byte	**Command**	**Description**
32	NOP (00H)	Command code
33	SUB_CTRL	Refer to *SUB_CTRL (Sub-Command Control Field) on page 42*.
34		
35		
36	Reserved (0)	Not used
37		
·		
·		
63		

NOP Response		
Byte	**Response**	**Description**
32	NOP (00H)	Command code
33	SUB_STAT	Refer to *SUB_STAT (Sub-Command Status) on page 42*.
34		
35		
36	Reserved (0)	Not used
37		
·		
·		
63		

■ PRM_RD: 01H (Read Parameter Command)

The PRM_RD command is used to read a parameter by specifying the parameter number and the data size. The command can be used in communication phases 2 and 3. Refer to drive instruction manual for MEMOBUS/Modbus register numbers.

PRM_RD Command		
Byte	**Command**	**Description**
32	PRM_RD (01H)	Command code
33	SUB_CTRL	Refer to *SUB_CTRL (Sub-Command Control Field) on page 42*.
34		
35		
36	NO	MEMOBUS/Modbus register number (Lower)
37		MEMOBUS/Modbus register number (Upper)
38	SIZE	Specify the parameter data size in bytes. 2, 4, 6, and 8 are available.
39	Reserved (0)	Not used
40		
41		
42		
·		
·		
63		

PRM_RD Response		
Byte	**Response**	**Description**
32	PRM_RD (01H)	Command code
33	SUB_STAT	Refer to *SUB_STAT (Sub-Command Status) on page 42*.
34		
35		
36	NO	The value (Lower) set in the command.
37		The value (Upper) set in the command.
38	SIZE	The value set in the command.
39	Reserved (0)	0 is set.
40	PARAMETER	Sets the data read in the byte set in the command. The option stores the data read for PARAMETER from lower byte (LSB) to upper byte (MSB). 0 is stored when the field is not used. 0 is stored in PARAMETER when command error occurs.
41		
42		
·		
·		
63		

■ PRM_WR: 02H (Write Parameter Sub-Command)

The PRM_WR command is used to write a parameter by specifying the parameter number, data size, and parameter data. The command can be used in communication phases 2 and 3. After the parameters are written, the CONFIG command

must be sent to force the parameters to become effective. Refer to the drive instruction manual for details of MEMOBUS/Modbus register numbers.

PRM_RDA Command		
Byte	**Command**	**Description**
32	PRM_WR (02H)	Command code
33	SUB_CTRL	Refer to *SUB_CTRL (Sub-Command Control Field) on page 42*.
34		
35		
36	NO	MEMOBUS/Modbus register number (Lower)
37		MEMOBUS/Modbus register number (Upper)
38	SIZE	Specify the parameter data size in bytes. 2, 4, 6, and 8 are available.
39	Reserved (0)	Not used
40	PARAMETER	Specify the lower byte (LSB) before the upper byte (MSB) in the size set in the SIZE.
41		
42		
·		
·		
63		

PRM_WR Response		
Byte	**Response**	**Description**
32	PRM_WR (02H)	Command code
33	SUB_STAT	Refer to *SUB_STAT (Sub-Command Status) on page 42*.
34		
35		
36	NO	The value (Lower) set in the command.
37		The value (Upper) set in the command.
38	SIZE	The value set in the command.
39	Reserved (0)	0 is set.
40	PARAMETER	The value set in the command. 0 is stored when the field is not used.
41		
42		
·		
·		
63		

In the following statuses, an alarm is detected and the command goes into error.

Error	Response
Register Number Error	“9” is set for SUBCMD_ALM.
Bit Count Error	“9” is set for SUBCMD_ALM.
Data Setting Error	“9” is set for SUBCMD_ALM.
Write Mode Error	“9” is set for SUBCMD_ALM.
Writing Error during Under Voltage	“9” is set for SUBCMD_ALM.
Writing Error during Parameter Processing	“9” is set for SUBCMD_ALM.

■ ALM_RD: 05H (Read Alarm or Warning Command)

The ALM_RD command is used to read the alarm or warning state. The command can be used in communication phases 2 and 3.
The current alarm or warning state is read to ALM_DATA as an alarm or warning code. Refer to the drive instruction manual for details about ALM_DATA.

ALM_RD Command		
Byte	**Command**	**Description**
32	ALM_RD (05H)	Command code
33	SUB_CTRL	Refer to *SUB_CTRL (Sub-Command Control Field) on page 42*.
34		
35		
36	ALM_RD_MOD	Specify the alarm or warning state. (Lower)
37		Specify the alarm or warning state. (Upper)
38	ALM_INDEX	Specify the alarm index. The command is enable when ALM_RD_MODE is 2. (Lower)
39		Specify the alarm index. The command is enable when ALM_RD_MODE is 2. (Upper)
40	Reserved (0)	Not used
41		
42		
·		
·		
63		

ALM_RD Response		
Byte	**Response**	**Description**
32	ALM_RD (05H)	Command code
33	SUB_STAT	Refer to *SUB_STAT (Sub-Command Status) on page 42*.
34		
35		
36	ALM_RD_MOD	The value set in the command.
37		
38	ALM_INDEX	The value set in the command.
39		
40	ALM_DATA	ALM_DATA specifies an alarm using 2 bytes.
41		
42		
·		
·		
63		

■ INV_I/O: 51H (Inverter I/O Control Command)

The INV_I/O command is used to set the drive I/O, display the monitor value, and execute references.

INV_IO Command		
Byte	**Command**	**Description**
32	INV_IO (51H)	Command code
33	SUB_CTRL	Refer to *SUB_CTRL (Sub-Command Control Field) on page 42*.
34		
35		
36	SEL_REF 3/4	Use the SEL REF3/4 command to select the contents of REF3 with bits 0 to 3 and to select the contents of REF4 with bits 4 to 7. Refer to *Table 22* for the selection ranges for SEL REF3/4 and SEL MON3/4.
37	SEL_REF 5/6	Use the SEL REF5/6 command to select the contents of REF5 with bits 0 to 3 and to select the contents of REF6 with bits 4 to 7. Refer to *Table 22* for the selection ranges for SEL REF5/6 and SEL MON5/6.
38	SEL_MON 3/4	Use the SEL MON3/4 command to select the contents of MON3 with bits 0 to 3 and to select the contents of MON4 with bits 4 to 7. Refer to *Table 23* for the selection ranges for SEL REF3/4 and SEL MON3/4.

INV_IO Command		
Byte	**Command**	**Description**
39	SEL_MON 5/6	Use the SEL MON5/6 command to select the contents of MON5 with bits 0 to 3 and to select the contents of MON6 with bits 4 to 7. Refer to *Table 23* for the selection ranges for SEL REF5/6 and SEL MON5/6.
40	Reference selected with SEL_REF3	Reference selected with SEL_REF3 (Lower)
41		Reference selected with SEL_REF3 (Upper)
42		Not used (Ignored if a value is set.)
43		Not used (Ignored if a value is set.)
44	Reference selected with SEL_REF4	Reference selected with SEL_REF4 (Lower)
45		Reference selected with SEL_REF4 (Upper)
46		Not used (Set to 0.)
47		Not used (Set to 0.)
48	Reference selected with SEL_REF5	Reference selected with SEL_REF5 (Lower)
49		Reference selected with SEL_REF5 (Upper)
50		Not used (Set to 0.)
51		Not used (Set to 0.)
52	Reference selected with SEL_REF6	Reference selected with SEL_REF6 (Lower)
53		Reference selected with SEL_REF6 (Upper)
54		Not used (Set to 0.)
55		Not used (Set to 0.)
56	Reserved (0)	Not used
·		
·		
63		

INV_IO Response		
Byte	**Command**	**Description**
32	INV_IO (51H)	Command code
33	SUB_STAT	Refer to *SUB_STAT (Sub-Command Status) on page 42*.
34		
35		
36	SEL_REF 3/4	The value set in the command.
37	SEL_REF 5/6	The value set in the command.
38	SEL_MON 3/4	The value set in the command.
39	SEL_MON 5/6	The value set in the command.
40	Monitor data set to SEL_MON3	Monitor data set to SEL_MON3 (Lower)
41		Monitor data set to SEL_MON3 (Upper)
42		Not used (Set to 0.)
43		Not used (Set to 0.)
44	Monitor data set to SEL_MON4	Monitor data set to SEL_MON4 (Lower)
45		Monitor data set to SEL_MON4 (Upper)
46		Not used (Set to 0.)
47		Not used (Set to 0.)
48	Monitor data set to SEL_MON5	Monitor data set to SEL_MON5 (Lower)
49		Monitor data set to SEL_MON5 (Upper)
50		Not used (Set to 0.)
51		Not used (Set to 0.)
52	Monitor data set to SEL_MON6	Monitor data set to SEL_MON6 (Lower)
53		Monitor data set to SEL_MON6 (Upper)
54		Not used (Set to 0.)
55		Not used (Set to 0.)
56	Reserved (0)	Not used
·		
·		
63		

11 Troubleshooting

◆ Drive-Side Error Codes

Drive-side error codes appear on the drive digital operator. Causes of the errors and corrective actions are listed in *Table 27*. For additional error codes that may appear on the drive digital operator, refer to the drive Technical Manual.

■ Faults

Both bUS (option communication error) and EF0 (External fault input from the option) can appear as an alarm or as a fault. When a fault occurs, the digital operator ALM LED remains lit. When an alarm occurs, the ALM LED flashes.

If communication stops while the drive is running, use the following questions as a guide to help remedy the fault:

- Is the option properly installed?
- Is the communication line properly connected to the option? Is it loose?
- Is the controller program working? Has the controller/PLC CPU stopped?
- Did a momentary power loss interrupt communications?

Table 27 Fault Display and Possible Solutions

LED Operator Display		Fault Name
bUS	bUS	Option Communication Error
		• After establishing initial communication, the connection was lost • Only detected when the run command or frequency reference is assigned to the option (b1-01 = 3 or b1-02 = 3)
Cause		**Possible Solution**
Master controller (PLC) has stopped communicating		• Check that power is supplied to the PLC • Check that PLC is not in program mode
Communication cable is not connected properly		• Check for faulty wiring • Correct any wiring problems
A data error occurred due to electric interference		• Inspect items that can minimize the effects of electrical noise • Counteract noise in the control circuit, main circuit, and ground wiring • If a magnetic contactor is identified as a source of noise, install a surge absorber to the contactor coil • Make sure the cable used meets the MECHATROLINK-III requirements • Make sure the option ground wire is connected between option FE terminal and the drive ground terminal connected to earth ground
Option is damaged		If there are no problems with the wiring and the error continues to occur, replace the option.
Connection Time-out		• The option Requested Packet Interval (RPI) timer timed out • Make sure that RPI time is set properly
Duplicate Station Address		Check if the option shares Station Address with at least one other node. Check the setting values of F6-20.

LED Operator Display		Fault Name
E5	E5	MECHATROLINK Watchdog Timer Error
		The watchdog has timed out.
Cause		**Possible Solution**
Data has not been received from the PLC, triggering the watchdog timer.		⇒ Execute DISCONNECT or ALM_CLR, then issue a CONNECT command or SYNC_SET command and proceed to phase 3.

LED Operator Display		Fault Name
EF0	EF0	Option Card External Fault
		The alarm function for an external device has been triggered.
Cause		**Corrective Action**
An external fault is being sent from the upper controller (PLC)		• Remove the cause of the external fault • Reset the external fault input from the PLC device
Problem with the PLC program		Check the program used by the PLC and make the appropriate corrections.
PLC is in the Idle Mode.		• Set the PLC to the Run Mode • Set the drive parameter F6-54 to 0 (Enabled) not to detect errors while the PLC is in the Idle Mode

LED Operator Display		Fault Name
oFA00	oFA00	Option Card Fault Option is not properly connected.
Cause		**Possible Solution**
Non-compatible option connected to the drive		Connect an option that is compatible with the drive.

LED Operator Display		Fault Name
oFA01	oFA01	Option Card Fault Option is not properly connected.
Cause		**Possible Solution**
Problem with the connectors between the drive and option		Turn the power off and check the connectors between the drive and option.

LED Operator Display		Fault Name
oFA30 to oFA43	oFA30 to oFA43	Option Card Fault Communication ID error.
Cause		**Possible Solution**
Option hardware fault		Replace the option.

■ Minor Faults and Alarms

LED Operator Display		Minor Fault Name	
CALL	CALL	Serial communication transmission error Communication is not established.	
Cause		**Possible Solution**	**Minor Fault (H2-□□ = 10)**
Communication wiring is faulty, there is a short circuit, or improper connection.		Check for wiring errors: • Correct the wiring • Remove ground shorts and reconnect loose wires	YES
Programming error on the master side.		Check communications at start-up and correct programming errors.	
Communication circuitry is damaged.		• Perform a self-diagnostics check • Replace the drive if the fault continues to occur	

LED Operator Display		Minor Fault Name	
CYC	CYC	Transmission Cycle Setting Error Transmission cycle from the master controller (PLC) was out of range.	
Cause		**Possible Solution**	**Minor Fault (H2-□□ = 10)**
Transmission cycle of the option set in the master controller (PLC) was out of range.		Set the transmission cycle of the master controller in the range of 250 µs, 500 µs, 750 µs, and 1 to 32 ms (0.5 ms increment). Make sure to set the communication cycle to 32 ms or less.	YES

12 Specifications

◆ Specifications

Table 28 Option Specifications

Item	Specification
Model	SI-ET3/V
Access mode	Start-stop synchronization, master/slave method
Communication speed	100 Mbps
Minimum transmission cycle	250 µs
Maximum transmission cycle	8 ms
Transmission cycle granularity	03H
Minimum wiring distance between stations	0.2 m (7.9 in.)
Maximum wiring distance between stations	100 m (3937.0 in.)
Data length	32-byte data transmission or 64-byte data transmission
Event driven communication	Valid
Profile	Compliant with standard inverter profile
Maximum number of stations	62 <1>
Ambient temperature	-10°C to +50°C (14°F to 122°F)
Humidity	95% RH or lower with no condensation
Storage temperature	-20°C to +60°C (-4°F to 140°F) allowed for short-term transport of the product
Area of use	Indoor (free of corrosive gas, airborne particles, etc.)
Altitude	1000 m (3280 ft.) or lower

<1> The maximum number of connectable stations changes depending on the types and settings of the host controller, baud rate, or communications cycle. For details, refer to the controller manual.

◆ Revision History

The revision dates and the numbers of the revised manuals appear on the bottom of the back cover.

MANUAL NO. SIEP C730600 63B

Published in Japan September 2013 13-6 ①

- Revision number
- Date of original publication
- Date of publication

Date of Publication	Revision Number	Section	Revised Content
September 2013	①	All	Revision: Manual number
June 2013	–	–	First edition

YASKAWA AC Drive-V1000 Option

MECHATROLINK-III

Technical Manual

DRIVE CENTER (INVERTER PLANT)
2-13-1, Nishimiyaichi, Yukuhashi, Fukuoka, 824-8511, Japan
Phone: 81-930-25-3844 Fax: 81-930-25-4369
http://www.yaskawa.co.jp

YASKAWA ELECTRIC CORPORATION
New Pier Takeshiba South Tower, 1-16-1, Kaigan, Minatoku, Tokyo, 105-6891, Japan
Phone: 81-3-5402-4502 Fax: 81-3-5402-4580
http://www.yaskawa.co.jp

YASKAWA AMERICA, INC.
2121 Norman Drive South, Waukegan, IL 60085, U.S.A.
Phone: 1-800-YASKAWA (927-5292) or 1-847-887-7000 Fax: 1-847-887-7310
http://www.yaskawa.com

YASKAWA ELÉTRICO DO BRASIL LTDA.
Avenida Piraporinha 777, Diadema, São Paulo, 09950-000, Brasil
Phone: 55-11-3585-1100 Fax: 55-11-3585-1187
http://www.yaskawa.com.br

YASKAWA EUROPE GmbH
Hauptstrasse 185, 65760 Eschborn, Germany
Phone: 49-6196-569-300 Fax: 49-6196-569-398
http://www.yaskawa.eu.com

YASKAWA ELECTRIC KOREA CORPORATION
9F, Kyobo Securities Bldg., 26-4, Yeouido-dong, Yeongdeungpo-gu, Seoul, 150-737, Korea
Phone: 82-2-784-7844 Fax: 82-2-784-8495
http://www.yaskawa.co.kr

YASKAWA ELECTRIC (SINGAPORE) PTE. LTD.
151 Lorong Chuan, #04-02A, New Tech Park, 556741, Singapore
Phone: 65-6282-3003 Fax: 65-6289-3003
http://www.yaskawa.com.sg

YASKAWA ELECTRIC (CHINA) CO., LTD.
12F, Carlton Bld., No.21 HuangHe Road, HuangPu District, Shanghai 200003, China
Phone: 86-21-5385-2200 Fax: 86-21-5385-3299
http://www.yaskawa.com.cn

YASKAWA ELECTRIC (CHINA) CO., LTD. BEIJING OFFICE
Room 1011, Tower W3 Oriental Plaza, No. 1 East Chang An Ave.,
Dong Cheng District, Beijing, 100738, China
Phone: 86-10-8518-4086 Fax: 86-10-8518-4082

YASKAWA ELECTRIC TAIWAN CORPORATION
9F, 16, Nanking E. Rd., Sec. 3, Taipei, 104, Taiwan
Phone: 886-2-2502-5003 Fax: 886-2-2505-1280

YASKAWA INDIA PRIVATE LIMITED
#17/A Electronics City, Hosur Road Bangalore 560 100 (Karnataka), India
Phone: 91-80-4244-1900 Fax: 91-80-4244-1901
http://www.yaskawaindia.in

YASKAWA ELECTRIC CORPORATION

In the event that the end user of this product is to be the military and said product is to be employed in any weapons systems or the manufacture thereof, the export will fall under the relevant regulations as stipulated in the Foreign Exchange and Foreign Trade Regulations. Therefore, be sure to follow all procedures and submit all relevant documentation according to any and all rules, regulations and laws that may apply.

Specifications are subject to change without notice for ongoing product modifications and improvements.

MANUAL NO. SIEP C730600 63B

Published in Japan September 2013 13-6 ①-0
13-7-11